1987
Data Book

élantec

HIGH PERFORMANCE ANALOG INTEGRATED CIRCUITS

Part Number Index

		Page
EDH0006/EDH0006C	1.5 Amp, High Voltage Driver	137
EDH0008/EDH0008C	3 Amp, High Voltage, High Current Driver	139
EHA2500/2502/2505	High Slew Rate Operational Amplifier	7
EHA2510/2512/2515	High Slew Rate Operational Amplifier	11
EHA2520/2522/2525	High Slew Rate Operational Amplifier	12
EHA2600/2602/2605	Wideband, High Impedance Operational Amplifier	13
EHA2620/2622/2625	Wideband, High Impedance Operational Amplifier	17
ELH0002/ELH0002C	Current Amplifier	77
ELH0021/ELH0021C	1 Amp Power Operational Amplifier	19
ELH0032/ELH0032C	Fast Operational Amplifier	26
ELH0033/ELH0033C	Fast Buffer Amplifier	81
ELH0041/ELH0041C	0.2 Amp Operational Amplifier	32
ELH0101/ELH0101C	2 Amp Power Op Amplifier	38
ELH0101A/ELH0101AC	2 Amp Power Op Amplifier-Selected	38
EL2003/EL2003C	100 MHz Video Line Driver	88
EL2004/EL2004C	350 MHz FET Buffer	100
EL2005/EL2005C	High Accuracy Fast Buffer	111
EL2006/EL2006C	High Gain Fast FET Input Op Amplifier	48
EL2006A/EL2006AC	High Gain Fast FET Input Op Amplifier-Selected	48
EL2007	High Efficiency Precision Servo Driver	59
EP2015/EP2015C	Fast Quad PNP Array	127
EP2015A/EP2015AC	Fast Quad PNP Array-Selected	127
EN2016/EN2016C	Fast Quad NPN Array	134
EN2016A/EN2016AC	Fast Quad NPN Array-Selected	134
EL2017/EL2017C	High Efficiency Precision Servo Controller	70
EL2018/EL2018C	Fast, High Voltage Comparator with Latch	121
EL2019/EL2019C	Fast, High Voltage Comparator with Master Slave	123
EL2020/EL2020C	30 MHz Current Feedback Amplifier	55
EL2033C	100 MHz Video Line Driver	88
EL231/EL231C	165 MHz Current Feedback Amplifier	56

élantec

HIGH PERFORMANCE ANALOG INTEGRATED CIRCUITS

1987 Data Book

WARNING—Life Support Applications Policy

Elantec, Inc. products are not authorized for and should not be used within Life Support Systems without the specific written consent of Elantec, Inc. Life Support systems are equipment intended to support or sustain life and whose failure to perform when properly used in accordance with instructions provided can be reasonably expected to result in significant personal injury or death. Users contemplating application of Elantec, Inc. products in Life Support Systems are requested to contact Elantec, Inc. factory headquarters to establish suitable terms & conditions for these applications. Elantec, Inc.'s warranty is limited to replacement of defective components and does not cover injury to persons or property or other consequential damages.

General Disclaimer

Specifications contained in this databook are current as of the publication date shown. Each datasheet is a controlled document. Current revisions, if any, to these specifications are maintained at the factory and are available upon request. Elantec, Inc. reserves the right to make changes in the circuitry or specifications contained herein at any time without notice. Elantec, Inc. assumes no responsibility for the use of any circuits described herein and makes no representations that they are free from patent infringement. Proprietary devices have patents pending.

Elantec, Inc.
1996 Tarob Court
Milpitas, CA 95035
Telephone: (408) 945-1323
TWX: 910–997–0649
Fax: (408) 945-9305

Elantec, Inc.
87 Jermyn Street
London SW1Y6JD
England
Telephone: 44-1-839-3841
Telex: 917835
Fax: 44-1-930-0751

élantec

HIGH PERFORMANCE ANALOG INTEGRATED CIRCUITS

2 FOR 1 POLICY

ELANTEC'S QUALITY IS SECOND TO NONE. WE ARE SO CONFIDENT OF OUR QUALITY THAT IF YOU RECEIVE ANY ELANTEC DEVICE(S) THAT DOES NOT MEET OUR CURRENT PUBLISHED ELECTRICAL SPECIFICATIONS, **WE WILL REPLACE IT WITH TWO GOOD DEVICES.**

CONDITIONS FOR REPLACEMENT

1. Replacement is on a per device basis (i.e., not per lot based on sample data).
2. Devices must not be physically damaged or have been soldered in.
3. Return of devices must be within 30 days of receipt by customer.
4. Please send devices in anti-static package material and include data with the devices that shows the failed parameter and its measured value.

Devices returned to Elantec will be analyzed and any problems found will have corrective action taken to assure that there will be no reoccurrence of the problem. If we determine that there is no problem with our devices we will (upon your request) be glad to send the parts back to you with our data to help you correlate your system or tester. In addition, our applications staff is always available to help you with any problem you may be having in using our devices.

NOTE: This policy is in addition to our standard warranty and may be discontinued at any time.

ELANTEC, INC. • 1996 Tarob Court • Milpitas, California 95035 • Telephone (408) 945-1323 • TWX 910-997-0649

Table of Contents

		Page
Amplifiers	Amplifier Selection Guide	6
EHA2500/2502/2505	High Slew Rate Operational Amplifier	7
EHA2510/2512/2515	High Slew Rate Operational Amplifier	11
EHA2520/2522/2525	High Slew Rate Operational Amplifier	12
EHA2600/2602/2605	Wideband, High Impedance Operational Amplifier	13
EHA2620/2622/2625	Wideband, High Impedance Operational Amplifier	17
ELH0021/ELH0021C	1 Amp Power Operational Amplifier	19
ELH0032/ELH0032C	Fast Operational Amplifier	26
ELH0041/ELH0041C	0.2 Amp Operational Amplifier	32
ELH0101/ELH0101C	2 Amp Power Op Amplifier	38
ELH0101A/ELH0101AC	2 Amp Power Op Amplifier-Selected	38
EL2006/EL2006C	High Gain Fast FET Input Op Amplifier	48
EL2006A/EL2006AC	High Gain Fast FET Input Op Amplifier-Selected	48
EL2020/EL2020C	30 MHz Current Feedback Amplifier	55
EL231/EL231C	165 MHz Current Feedback Amplifier	56
Servo Amplifiers	Servo Amplifiers Selection Guide	58
EL2007	High Efficiency Precision Servo Driver	59
EL2017/EL2017C	High Efficiency Precision Servo Controller	70
Buffers	Buffer Selection Guide	76
ELH0002/ELH0002C	Current Amplifier	77
ELH0033/ELH0033C	Fast Buffer Amplifier	81
EL2003/EL2003C	100 MHz Video Line Driver	88
EL2004/EL2004C	350 MHz FET Buffer	100
EL2005/EL2005C	High Accuracy Fast Buffer	111
EL2033C	100 MHz Video Line Driver	88
Comparators	Comparator Selection Guide	120
EL2018/EL2018C	Fast, High Voltage Comparator with Latch	121
EL2019/EL2019C	Fast, High Voltage Comparator with Master Slave	123
Arrays	Array Selection Guide	126
EP2015/EP2015C	Fast Quad PNP Array	127
EP2015A/EP2015AC	Fast Quad PNP Array-Selected	127
EN2016/EN2016C	Fast Quad NPN Array	134
EN2016A/EN2016AC	Fast Quad NPN Array-Selected	134
Solenoid/Relay Drivers	Driver Selection Guide	136
EDH0006/EDH0006C	1.5 Amp, High Voltage Driver	137
EDH0008/EDH0008C	3 Amp, High Voltage, High Current Driver	139
QUALITY AND MILITARY PROGRAMS		
QRA-1	Elantec's Quality and Reliability Assurance Policy and Procedures	141
QRA-2	Elantec's Military Processing-Monolithic Integrated Circuits	146
QRA-3	Elantec 883B Program for Hybrid Integrated Circuits	150
ORDERING INFORMATION		154
PACKAGE OUTLINES		155

DESC Drawings

Elantec is an active participant in the DESC Drawing standardization program. This is a program administered by the Defense Electronics Supply Center (DESC) in Dayton, Ohio. Under this program, a MIL-STD-1772 certified manufacturer, such as Elantec, may supply hybrid devices to many customers using one government controlled specification instead of having each customer create his own Source Control Drawing (SCD). Elantec treats these devices as standard parts, i.e. they are built to be inventoried at both Elantec and our distributors in anticipation of customer orders rather than being built to order. This practice lowers costs, shortens lead times, and improves quality.

At publication time, this is the list of devices for which Elantec is an approved supplier:

DESC Drawing Number	Generic Part Number
7801301GX	Obsolete-see 7801301XX
7801301XX	ELH0002H/883
8001301ZX	ELH0032G/883
8001401ZX	ELH0033G/883
8508701ZX	ELH0041G/883
8508801YX	ELH0021K/883
8508901YX	ELH0101AK/883
8508902YX	ELH0101K/883



TM

Amplifiers

élantec

HIGH PERFORMANCE ANALOG INTEGRATED CIRCUITS

ELANTEC Part Number	Description	Temp. Range	Min. A_{VOL} Over Temp.	Max. Offset Voltage		Max. Bias Current		Gain Bandwidth Product Typical (at Gain ≥ xx)	Min. Slew Rate 25°C (Comp for A_V = xx)	Continuous Output Current	Max. Supply Current	Packages
				25°C	Over Temp.	25°C	Over Temp.					
EHA2500	Monolithic, DI Unity Gain Stable	−55 to 125°C	83dB	5mV	8mV	200nA	400nA	12MHz ($A_V \geq 10$)	25V/μs ($A_V = 1$)	±10mA Min.	6mA	8 Pin P-DIP, Cerdip 8 Pin TO-99
EHA2502		−55 to 125°C	80dB	8mV	10mV							
EHA2505		0 to 75°C	80dB	8mV	10mV							
EHA2510	Monolithic, DI Unity Gain Stable	−55 to 125°C	77dB	8mV	11mV	200nA	400nA	12MHz ($A_V \geq 10$)	50V/μs ($A_V = 1$)	±10mA Min.	6mA	8 Pin P-DIP, Cerdip 8 Pin TO-99
EHA2512		−55 to 125°C	74dB	10mV	14mV							
EHA2515		0 to 75°C	74dB	10mV	14mV							
EHA2520	Monolithic, DI Gain of 3 Stable	−55 to 125°C	77dB	8mV	11mV	200nA	400nA	20MHz ($A_V \geq 10$)	100V/μs ($A_V = 3$)	±10mA Min.	6mA	8 Pin P-DIP, Cerdip 8 Pin TO-99 20 Pin LCC
EHA2522		−55 to 125°C	74dB	10mV	14mV							
EHA2525		0 to 75°C	74dB	10mV	14mV							
EHA2600	Monolithic, DI Unity Gain Stable	−55 to 125°C	96dB	4mV	6mV	10nA	30nA	12MHz ($A_V \geq 1$)	4V/μs ($A_V = 1$)	±15mA Min.	4mA	8 Pin P-DIP, Cerdip 8 Pin TO-99
EHA2602		−55 to 125°C	95dB	5mV	7mV							
EHA2605		0 to 75°C	96dB	5mV	7mV							
EHA2620	Monolithic, DI Gain of 5 Stable	−55 to 125°C	96dB	4mV	6mV	15nA	35nA	100MHz ($A_V \geq 100$)	25V/μs ($A_V = 5$)	±15mA Min.	4mA	8 Pin P-DIP, Cerdip 8 Pin TO-99 20 Pin LCC
EHA2622		−55 to 125°C	95dB	5mV	7mV							
EHA2625		0 to 75°C	96dB	5mV	7mV							
EL231	Hybrid, Target Specification Pin-for-Pin with CLC 231 Current Mode Feedback	−25 to 85°C −55 to 125°C	*	2mV	4.5mV	21μA	35μA	650MHz ($A_V \geq 5$)	2500V/μs ($A_V = 1$)	±100mA Min.	22mA	12 Pin TO-8
EL2006	Hybrid Our Fastest Op-Amp! FET Input, ELH0032 Pinout	−25 to 85°C −55 to 125°C	80dB	3mV	5.5mV	100pA	10nA	500MHz ($A_V \geq 20$)	350V/μs ($A_V = 1$)	±100mA Min.	23mA	12 Pin TO-8 52 Pin LCC
EL2020	Monolithic, Target Specification Current Mode Feedback	−25 to 85°C −55 to 125°C	*	TBD	TBD	TBD	TBD	150MHz ($A_V \geq 5$)	1000V/μs ($A_V = 1$)	±33mA Min.	15mA	8 Pin P-DIP 8 Pin Cerdip
ELH0021	Hybrid Industry Standard Pinout Power OP-AMP	−25 to 85°C −55 to 125°C	100dB	3mV	5mV	300nA	1μA	1MHz ($A_V \geq 1$)	1.5V/μs ($A_V = 1$)	±1.1A Min.	4mA	8 Pin TO-3
ELH0032	Hybrid Industry Standard Pinout FET Input	−25 to 85°C −55 to 125°C	45dB	5mV	10mV	1nA	50nA	360MHz ($A_V \geq 20$)	350V/μs ($A_V = 1$)	Power Limited ±100mA Min.	23mA	12 Pin TO-8
ELH0041	Hybrid Industry Standard Pinout Power OP-AMP	−25 to 85°C −55 to 125°C	100dB	3mV	5mV	300nA	1μA	1MHz ($A_V \geq 1$)	1.5V/μs ($A_V = 1$)	±200mA Typ.	4mA	12 Pin TO-8
ELH0101	Hybrid Industry Standard Pinout Power OP-AMP	−25 to 85°C −55 to 125°C	100dB	3mV	7mV	300pA	60nA	4MHz ($A_V \geq 1$)	7.5V/μs ($A_V = 1$)	±2.1A Min.	35mA	8 Pin TO-3

Note—Some specifications in table are for the best version available.
Consult individual data sheets for product details.
*Current mode feedback, voltage gain not applicable.

élantec
HIGH PERFORMANCE ANALOG INTEGRATED CIRCUITS

EHA2500 Series
High Slew Rate Operational Amplifier

Features
- High slew rate—100 V/μs
- Fast settling—200 ns
- Wide power bandwidth
- High input impedance
- Low offset current—25 nA
- Compensated versions available

Applications
- Data acquisition systems
- R.F. amplifiers
- Video amplifiers
- Signal generators
- Pulse amplification
- High speed sample and holds

General Description
Elantec's EHA2500 Series of monolithic high slew rate amplifiers is designed and optimized for high slew rates and wide bandwidths. Three different types are offered. The EHA250X series is unity gain stable and low cost. The EHA251X series has twice the bandwidth and slew rate of the EHA250X series and is also unity gain stable. For the best AC performance choose the EHA252X series which has the highest slew rate –120 V/μs—and the widest bandwidths available. The EHA252X series is stable with closed loop gains as low as three.

These devices are fabricated using Elantec's DInamic Dielectrically Isolated process that has excellent PNPs and NPNs that allow higher bandwidths than standard junction isolated process.

Elantec's high speed amplifiers are widely used in military, video and medical applications. They are especially suited for high speed video amplifiers, pulse detectors, and wide bandwidth filters.

Elantec's facilities comply with MIL-I-45208A and other applicable quality specifications. For information on Elantec's military processing, request our brochure: *Elantec's Military Processing—Monolithic Products.*

Connection Diagrams

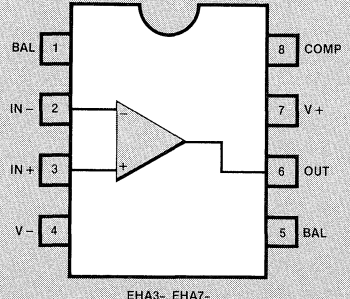

EHA3-, EHA7-

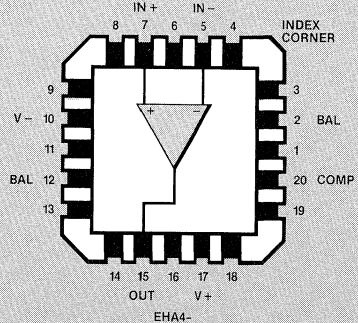

EHA4-

TOP VIEWS

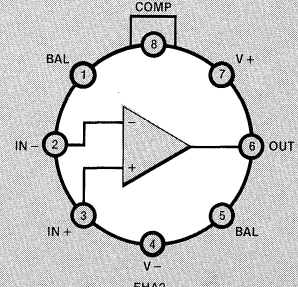

EHA2-

EHA2500 Series

High Slew Rate Operational Amplifier

Selection Guide

Part Number	Temp.	V_{OS} (Max) mV	I_{BIAS} (Max) nA	I_{OS} (Max) nA	G_{BW} (Typ) MHz	PBW (Min) kHz	S_R (Min) V/μs	t_{SET} (Typ) μs	PSRR, CMRR (Min) dB	R_{IN} (Min) MΩ	Minimum Stable Gain
EHA2500	M	5	200	25	12	350	25	0.33	80	25	1
EHA2502	M	8	250	50	12	300	20	0.33	74	20	1
EHA2505	C	8	250	50	12	300	20	0.33	74	20	1
EHA2510	M	8	200	25	12	750	50	0.25	80	50	1
EHA2512	M	10	250	50	12	600	40	0.25	74	40	1
EHA2515	C	10	250	50	12	600	40	0.25	74	40	1
EHA2520	M	8	200	25	20	1500	100	0.20	80	50	3
EHA2522	M	10	250	50	20	1200	80	0.20	74	40	3
EHA2525	C	10	250	50	20	1200	80	0.20	74	40	3

Ordering Information

Dice (Note 1) (EHA0–)	14-Pin DIP Ceramic (EHA1–)	TO-99 Metal Can (EHA2–)	8-Pin DIP Plastic (EHA3–)	LCC 20-Pin (EHA4–)	8-Pin DIP Cerdip (EHA7–)	8-Pin SO (EHA8–)
EHA0-2500-6		EHA2-2500-8 EHA2-2500-2			EHA7-2500-8 EHA7-2500-2	
		EHA2-2502-8 EHA2-2502-2			EHA7-2502-8 EHA7-2502-2	
EHA0-2505-6		EHA2-2505-5	EHA3-2505-5		EHA7-2505-5	
EHA0-2510-6		EHA2-2510-8 EHA2-2510-2			EHA7-2510-8 EHA7-2510-2	
		EHA2-2512-8 EHA2-2512-2			EHA7-2512-8 EHA7-2512-2	
EHA0-2515-6		EHA2-2515-5	EHA3-2515-5		EHA7-2515-5	
EHA0-2520-6	Consult Factory	EHA2-2520-8 EHA2-2520-2		EHA4-2520-8	EHA7-2520-8 EHA7-2520-2	
		EHA2-2522-8 EHA2-2522-2			EHA7-2522-8 EHA7-2522-2	
EHA0-2525-6		EHA2-2525-5	EHA3-2525-5		EHA7-2525-5	Consult Factory

Note 1: Dice are available in either waffle packs or wafer form. Consult factory for more information.
Note 2: Consult factory for special packaging or temperature range requirements.
Note 3: Existence of a part number does not imply availability. Consult factory for delivery.

PREFIX	OUTLINE#	SUFFIX
		-1 0°C to 200°C
EHA2- TO-99 Metal Can	.MDP0004	-2 −55°C to 125°C
EHA3- 8-Pin Plastic DIP	.MDP0006	-3
EHA4- Leadless Chip Carrier (LCC)	.MDP0007	-4 −25°C to 85°C
EHA7- 8-Pin CERDIP	.MDP0010	-5 0°C to 75°C
EHA8- Small Outline (SO)		-6 100% 25°C Probe (Dice Only)
EHA9- Flat-Pack		-7
EHA0- Dice		-8 See Elantec's "Military Processing—Monolithic Products".
		-9

Test Level Descriptions

Test Level	Test Procedure
I	100% production tested and QA sample tested per QA test plan QCX0002.
II	100% production tested at $T_A = 25°C$, and QA sample tested at $T_A = 25°C$, T_{MAX} and T_{MIN} per QA test plan QCX0002.
III	QA sample tested per QA test plan QCX0002.
IV	Parameter is guaranteed (but not tested) by Design and Characterization Data.
V	Parameter is typical value for information purposes only.

AC Test Circuits

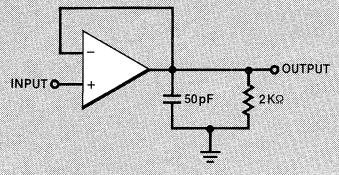

EHA250X AND EHA251X

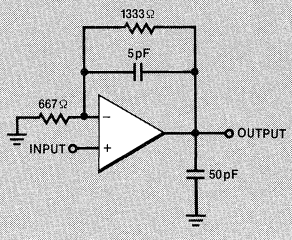

EHA252X

Burn-In Circuit

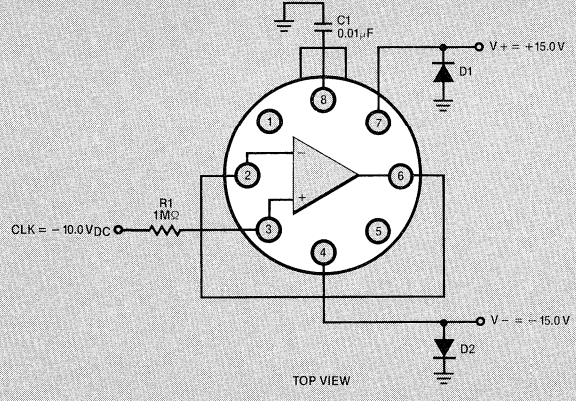

TOP VIEW

Die Layout

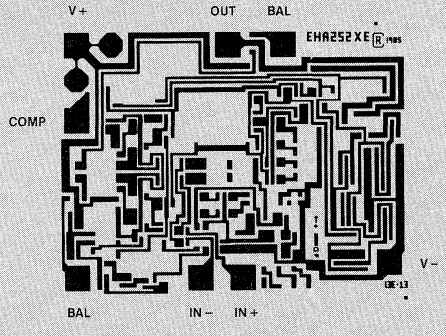

DIE SIZE: 52 x 66 MILS

EHA2500/2502/2505

High Slew Rate Operational Amplifier

Absolute Maximum Ratings

V_S	Supply Voltage	±20V	T_A	Operating Temperature Range:	
V_{IN}	Differential Input Voltage	±15.0V		EHA2500/02	−55°C to +125°C
P_D	Maximum Power Dissipation	300mW		EHA2505	0°C to +75°C
I_{OUT}	Peak Output Current	50mA	T_{ST}	Storage Temperature	−65°C to +150°C
				Lead Temperature (soldering, 5 seconds)	300°C

Important Note: **All parameters having Min./Max. specifications are guaranteed. The Test Level column indicates the specific device testing actually performed during production and Quality Assurance inspection. Elantec performs most electrical tests using modern high-speed automatic test equipment, specifically the LTX 77 Series system. Unless otherwise noted, all tests are pulsed tests, therefore $T_J = T_C = T_A$. See page 3 for Test Level Descriptions.**

DC Electrical Characteristics $V_S = \pm 15V$, $T_{MIN} < T_A < T_{MAX}$, unless otherwise specified.

			EHA2500				EHA2502				EHA2505				
	Parameter	Test Conditions	Min.	Typ.	Max.	Test Level	Min.	Typ.	Max.	Test Level	Min.	Typ.	Max.	Test Level	Units
V_{OS}	Offset Voltage	$T_A = 25°C$		2	5	I		4	8	I		4	8	I	mV
					8	I			10	I			10	III	mV
$\Delta V_{OS}/\Delta T$	Offset Voltage Drift			20		V		20		V		20		V	µV/°C
I_B	Bias Current	$T_A = 25°C$		100	200	I		125	250	I		125	250	I	nA
					400	I			500	I			500	III	nA
I_{OS}	Offset Current	$T_A = 25°C$		10	25	I		20	50	I		20	50	I	nA
					50	I			100	I			100	III	nA
R_{IN}	Input Resistance		25	50		IV	20	50		IV	20	50		IV	MΩ
V_{CM}	Common-Mode Range		±10.0			I	±10.0			I	±10.0			II	V
CMRR	Common-Mode Rejection Ratio	$\Delta V_{CM} = \pm 10V$	80	90		I	74	90		I	74	90		II	dB
PSRR	Power Supply Rejection Ratio	$\Delta V_S = \pm 5V$	80	90		I	74	90		I	74	90		II	dB
A_{VOL}	Large Signal Voltage Gain	$R_L = 2k\Omega$, $V_{OUT} = \pm 10V$, $T_A = 25°C$	20	30		I	15	25		I	15	25		I	V/mV
		$R_L = 2k\Omega$, $V_{OUT} = \pm 10V$	15			I	10			I	10			III	V/mV
V_O	Output Voltage Swing	$R_L = 2k\Omega$	±10.0	±12.0		I	±10.0	±12.0		I	±10.0	±12.0		II	V
I_{OUT}	Output Current	$V_{OUT} = \pm 10V$, $T_A = 25°C$	±10	±20		I	±10	±20		I	±10	±20		I	mA
I_{CC}	Supply Current	$T_A = 25°C$		4	6	I		4	6	I		4	6	I	mA

AC Electrical Characteristics $V_S = \pm 15V$, $A_V = 1$, $V_{OUT} = \pm 200mV$, $T_A = 25°C$ unless otherwise specified (See AC test circuit)

t_r	Rise Time			25	50	I		25	50	I		25	50	III	ns
SR	Slew Rate	$V_{OUT} = \pm 5V$	±25	±30		I	±20	±30		I	±20	±30		I	V/µs
GBW	Gain Bandwidth Product	$A_V \geq 10$		12		V		12		V		12		V	MHz
	Full Power Bandwidth	$V_{OUT} \pm 10V$ (Note 1)	350	500		I	300	500		I	300	500		I	kHz
	Overshoot			25	40	I		25	50	I		25	50	III	%
t_s	Settling Time to 0.1%	$V_{OUT} = \pm 5V$		0.33		V		0.33		V		0.33		V	µs

Note 1: The Full Power Bandwidth is guaranteed by testing slew rate.

EHA2510/2512/2515

High Slew Rate Operational Amplifier

Absolute Maximum Ratings

V_S	Supply Voltage	±20V	T_A	Operating Temperature Range:	
V_{IN}	Differential Input Voltage	±15.0V		EHA2510/12	−55°C to +125°C
P_D	Maximum Power Dissipation	300mW		EHA2515	0°C to +75°C
I_{OUT}	Peak Output Current	50mA	T_{ST}	Storage Temperature	−65°C to +150°C
				Lead Temperature (soldering, 5 seconds)	300°C

Important Note: All parameters having Min./Max. specifications are guaranteed. The Test Level column indicates the specific device testing actually performed during production and Quality Assurance inspection. Elantec performs most electrical tests using modern high-speed automatic test equipment, specifically the LTX 77 Series system. Unless otherwise noted, all tests are pulsed tests, therefore $T_J = T_C = T_A$. See page 3 for Test Level Descriptions.

DC Electrical Characteristics $V_S = \pm 15V$, $T_{MIN} < T_A < T_{MAX}$, unless otherwise specified.

			EHA2510				EHA2512				EHA2515				
	Parameter	Test Conditions	Min.	Typ.	Max.	Test Level	Min.	Typ.	Max.	Test Level	Min.	Typ.	Max.	Test Level	Units
V_{OS}	Offset Voltage	$T_A = 25°C$		4	8	I		5	10	I		5	10	I	mV
					11	I			14	I			14	III	mV
$\Delta V_{OS}/\Delta T$	Offset Voltage Drift			20		V		25		V		30		V	µV/°C
I_B	Bias Current	$T_A = 25°C$		100	200	I		125	250	I		125	250	I	nA
					400	I			500	I			500	III	nA
I_{OS}	Offset Current	$T_A = 25°C$		10	25	I		20	50	I		20	50	I	nA
					50	I			100	I			100	III	nA
R_{IN}	Input Resistance		50	100		IV	40	100		IV	40	100		IV	MΩ
V_{CM}	Common-Mode Range		±10.0			I	±10.0			I	±10.0			II	V
CMRR	Common-Mode Rejection Ratio	$\Delta V_{CM} = \pm 10V$	80	90		I	74	90		I	74	90		II	dB
PSRR	Power Supply Rejection Ratio	$\Delta V_S = \pm 5V$	80	90		I	74	90		I	74	90		II	dB
A_{VOL}	Large Signal Voltage Gain	$R_L = 2k\Omega$, $V_{OUT} = \pm 10V$, $T_A = 25°C$	10	15		I	7.5	15		I	7.5	15		I	V/mV
		$R_L = 2k\Omega$, $V_{OUT} = \pm 10V$	7.5			I	5			I	5			III	V/mV
V_O	Output Voltage Swing	$R_L = 2k\Omega$	±10.0	±12.0		I	±10.0	±12.0		I	±10.0	±12.0		II	V
I_{OUT}	Output Current	$V_{OUT} = \pm 10V$, $T_A = 25°C$	±10	±20		I	±10	±20		I	±10	±20		I	mA
I_{CC}	Supply Current	$T_A = 25°C$		4	6	I		4	6	I		4	6	I	mA

AC Electrical Characteristics $V_S = \pm 15V$, $A_V = 1$, $V_{OUT} = \pm 200mV$, $T_A = 25°C$, unless otherwise specified. (See AC test circuit)

t_r	Rise Time			25	50	I		25	50	I		25	50	III	ns
SR	Slew Rate	$V_{OUT} = \pm 5V$	±50	±65		I	±40	±60		I	±40	±60		I	V/µs
GBW	Gain Bandwidth Product	$A_V \geq 10$		12		V		12		V		12		V	MHz
	Full Power Bandwidth	$V_{OUT} \pm 10V$ (Note 1)	750	1000		I	600	1000		I	600	1000		I	kHz
	Overshoot			25	40	I		25	50	I		25	50	III	%
t_s	Settling Time to 0.1%	$V_{OUT} = \pm 5V$		0.25		V		0.25		V		0.25		V	µs

Note 1: The Full Power Bandwidth is guaranteed by testing slew rate.

Absolute Maximum Ratings

V_S	Supply Voltage	±20V	T_A	Operating Temperature Range:	
V_{IN}	Differential Input Voltage	±15.0V		EHA2520/22	−55°C to +125°C
P_D	Maximum Power Dissipation	300mW		EHA2525	0°C to +75°C
I_{OUT}	Peak Output Current	50mA	T_{ST}	Storage Temperature	−65°C to +150°C
				Lead Temperature (soldering, 5 seconds)	300°C

Important Note: All parameters having Min./Max. specifications are guaranteed. The Test Level column indicates the specific device testing actually performed during production and Quality Assurance inspection. Elantec performs most electrical tests using modern high-speed automatic test equipment, specifically the LTX 77 Series system. Unless otherwise noted, all tests are pulsed tests, therefore $T_J = T_C = T_A$. See page 3 for Test Level Descriptions.

DC Electrical Characteristics $V_S = \pm 15V$, $T_{MIN} < T_A < T_{MAX}$, unless otherwise specified.

	Parameter	Test Conditions	EHA2520				EHA2522				EHA2525				Units
			Min.	Typ.	Max.	Test Level	Min.	Typ.	Max.	Test Level	Min.	Typ.	Max.	Test Level	
V_{OS}	Offset Voltage	$T_A = 25°C$		4	8	I		5	10	I		5	10	I	mV
					11	I			14	I			14	III	mV
$\Delta V_{OS}/\Delta T$	Offset Voltage Drift			20		V		25		V		30		V	µV/°C
I_B	Bias Current	$T_A = 25°C$		100	200	I		125	250	I		125	250	I	nA
					400	I			500	I			500	III	nA
I_{OS}	Offset Current	$T_A = 25°C$		10	25	I		20	50	I		20	50	I	nA
					50	I			100	I			100	III	nA
R_{IN}	Input Resistance		50	100		IV	40	100		IV	40	100		IV	MΩ
V_{CM}	Common-Mode Range		±10.0			I	±10.0			I	±10.0			II	V
CMRR	Common-Mode Rejection Ratio	$\Delta V_{CM} = \pm 10V$	80	90		I	74	90		I	74	90		II	dB
PSRR	Power Supply Rejection Ratio	$\Delta V_S = \pm 5V$	80	90		I	74	90		I	74	90		II	dB
A_{VOL}	Large Signal Voltage Gain	$R_L = 2k\Omega$, $V_{OUT} = \pm 10V$, $T_A = 25°C$	10	15		I	7.5	15		I	7.5	15		I	V/mV
		$R_L = 2k\Omega$, $V_{OUT} = \pm 10V$	7.5			I	5			I	5			III	V/mV
V_O	Output Voltage Swing	$R_L = 2k\Omega$	±10.0	±12.0		I	±10.0	±12.0		I	±10.0	±12.0		II	V
I_{OUT}	Output Current	$V_{OUT} = \pm 10V$, $T_A = 25°C$	±10	±20		I	±10	±20		I	±10	±20		I	mA
I_{CC}	Supply Current	$T_A = 25°C$		4	6	I		4	6	I		4	6	I	mA

AC Electrical Characteristics $V_S = \pm 15V$, $A_V = 3$, $V_{OUT} = \pm 200mV$, $T_A = 25°C$, unless otherwise specified. (See AC test circuit)

t_r	Rise Time			25	50	I		25	50	I		25	50	III	ns
SR	Slew Rate	$V_{OUT} = +5V$	±100	±120		I	±80	±120		I	±80	±120		I	V/µs
GBW	Gain Bandwidth Product	$A_V \geq 10$	10	20		IV	10	20		IV	10	20		IV	MHz
	Full Power Bandwidth	$V_{OUT} \pm 10V$ (Note 1)	1500	2000		I	1200	1600		I	1200	1600		I	kHz
	Overshoot			25	40	I		25	50	I		25	50	III	%
t_s	Settling Time to 0.1%	$V_{OUT} = \pm 5V$		0.20		V		0.20		V		0.20		V	µs

Note 1: The Full Power Bandwidth is guaranteed by testing slew rate.

élantec
HIGH PERFORMANCE ANALOG INTEGRATED CIRCUITS

EHA2600 Series

Wideband, High Impedance Operational Amplifier

Features

- High slew rates
- High input impedance—500 MΩ
- Low input bias currents—1nA
- Low input offset current—1nA
- High gain—>100dB
- Output short circuit protected
- Output clamp
- Low input offset voltage—500μV

Applications

- Video amplifiers
- Precision comparators
- Pulse amplifiers
- DAC buffers
- High-speed sample and holds

General Description

Elantec's EHA2600 Series of high performance op amps is designed to offer designers high-speed amplifiers without sacrificing DC characteristics. These products are fabricated using Elantec's DInamic Dielectrically Isolated processes.

Two different versions are offered. The EHA260X series which is internally compensated and unity gain stable, and the EHA262X series that is optimized for slew rate and bandwidth.

These devices are used in a wide variety of applications including video signal conditioning, instrumentation, and data acquisition systems. For any application that requires high-speed AC and good DC performance to accurately process signals, the EHA2600 series provides excellent performance with over a 100dB of gain, 1nA of bias current and gain bandwidths to 100MHz.

Elantec facilities comply with MIL-I-45208A and other applicable quality specifications. For information on Elantec's military processing, request our brochure: *Elantec's Military Processing—Monolithic Products.*

Connection Diagrams

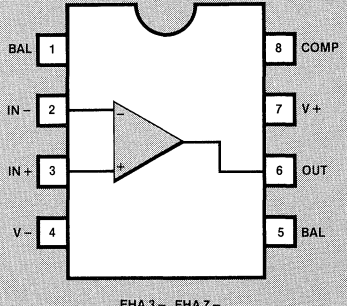

EHA 3 –, EHA 7 –

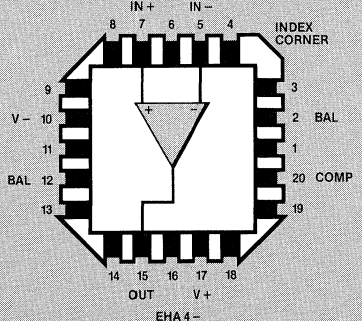

EHA 4 –

TOP VIEWS

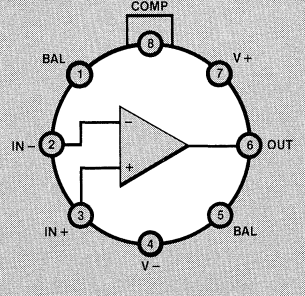

EHA 2 –

EHA2600 Series

Wideband, High Impedance Operational Amplifier

Selection Guide

Part Number	Temp.	V_{OS} (Max) mV	I_{BIAS} (Max) nA	I_{OS} (Max) nA	G_{BW} (Typ) MHz	PBW (Min) kHz	S_R (Min) V/μs	t_{SET} (Typ) μs	PSRR, CMRR (Min) dB	R_{IN} (Min) MΩ	Minimum Stable Gain
EHA2600	M	4	10	10	12	50	4	1.5	80	100	1
EHA2602	M	5	25	25	12	50	4	1.5	74	40	1
EHA2605	C	5	25	25	12	50	4	1.5	74	40	1
EHA2620	M	4	15	15	100	400	25	—	80	65	5
EHA2622	M	5	25	25	100	320	20	—	74	40	5
EHA2625	C	5	25	25	100	320	20	—	74	40	5

Ordering Information

Dice (Note 1) (EHA0–)	14-Pin DIP Ceramic (EHA1–)	TO–99 Metal Can (EHA2–)	8-Pin DIP Plastic (EHA3–)	LCC 20-Pin (EHA4–)	8-Pin DIP Cerdip (EHA7–)	8-Pin SO (EHA8–)
EHA0–2600–6		EHA2–2600–8 EHA2–2600–2 EHA2–2600–1			EHA7–2600–8 EHA7–2600–2	
		EHA2–2602–8 EHA2–2602–2			EHA7–2602–8 EHA7–2602–2	
EHA0–2605–6		EHA2–2605–5	EHA3–2605–5		EHA7–2605–5	
EHA0–2620–6	Consult Factory Consult Factory	EHA2–2620–8 EHA2–2620–2 EHA2–2620–1		EHA4–2620–8	EHA7–2620–8 EHA7–2620–2	
	Consult Factory Consult Factory	EHA2–2622–8 EHA2–2622–2			EHA7–2622–8 EHA7–2622–2	
EHA0–2625–6	Consult Factory	EHA2–2625–5	EHA3–2625–5		EHA7–2625–5	Consult Factory

Note 1: Dice are available in either waffle packs or wafer form. Consult factory for more information.
Note 2: Consult factory for special packaging or temperature range requirements.
Note 3: Existance of a part number does not imply availability. Consult factory for delivery.

PREFIX		OUTLINE#
EHA2–	TO–99 Metal Can	MDP0004
EHA3–	8-Pin Plastic DIP	MDP0006
EHA4–	Leadless Chip Carrier (LCC)	MDP0007
EHA7–	8-Pin CERDIP	MDP0010
EHA8–	Small Outline (SO)	
EHA9–	Flat-Pack	
EHA0–	Dice	

SUFFIX	
–1	0°C to 200°C
–2	–55°C to 125°C
–3	
–4	–25°C to 85°C
–5	0°C to 75°C
–6	100% 25°C Probe (Dice Only)
–7	
–8	See Elantec's "Military Processing—Monolithic Products".
–9	

EHA2600/2602/2605

Wideband, High Impedance Operational Amplifier

Absolute Maximum Ratings

V_S	Supply Voltage	±22.5V	T_A	Operating Temperature Range:	
V_{IN}	Differential Input Voltage	±12.0V		EHA2600/02	−55°C to +125°C
P_D	Maximum Power Dissipation	300mW		EHA2605	0°C to +75°C
I_{OP}	Peak Output Current	Short Circuit Protected	T_{ST}	Storage Temperature	−65°C to +150°C
				Lead Temperature (soldering, 5 seconds)	300°C

Important Note: All parameters having Min./Max. specifications are guaranteed. The Test Level column indicates the specific device testing actually performed during production and Quality Assurance inspection. Elantec performs most electrical tests using modern high-speed automatic test equipment, specifically the LTX 77 Series system. Unless otherwise noted, all tests are pulsed tests, therefore $T_J = T_C = T_A$.

Test Level	Test Procedure
I	100% production tested and QA sample tested per QA test plan QCX0002.
II	100% production tested at $T_A = 25°C$, and QA sample tested at $T_A = 25°C$, T_{MAX} and T_{MIN} per QA test plan QCX0002.
III	QA sample tested per QA test plan QCX0002.
IV	Parameter is guaranteed (but not tested) by Design and Characterization Data.
V	Parameter is typical value for information purposes only.

DC Electrical Characteristics $V_S = \pm 15V$, $T_{MIN} < T_A < T_{MAX}$, unless otherwise specified

			EHA2600				EHA2602				EHA2605				
	Parameter	Test Conditions	Min.	Typ.	Max.	Test Level	Min.	Typ.	Max.	Test Level	Min.	Typ.	Max.	Test Level	Units
V_{OS}	Offset Voltage	$T_A = 25°C$		0.5	4	I		3	5	I		3	5	I	mV
				2	6	I			7	I			7	III	mV
$\Delta V_{OS}/\Delta T$	Offset Voltage Drift	(Note 1)		5		V		5		V		5		V	µV/°C
I_B	Bias Current	$T_A = 25°C$		1	10	I		15	25	I		15	25	I	nA
				10	30	I			60	I			40	III	nA
I_{OS}	Offset Current	$T_A = 25°C$		1	10	I		5	25	I		5	25	I	nA
				5	30	I			60	I			40	III	nA
R_{IN}	Input Resistance		100	500		IV	40	300		IV	40	300		IV	MΩ
V_{CM}	Common-Mode Range		±11.0			IV	±11.0			IV	±11.0			IV	V
CMRR	Common-Mode Rejection Ratio	$\Delta V_{CM} = \pm 10V$	80	100		I	74	100		I	74	100		II	dB

DC Electrical Characteristics $V_S = \pm 15V$, $T_{MIN} < T_A < T_{MAX}$, unless otherwise specified —Continued

	Parameter	Test Conditions	EHA2600				EHA2602				EHA2605				Units
			Min.	Typ.	Max.	Test Level	Min.	Typ.	Max.	Test Level	Min.	Typ.	Max.	Test Level	
PSRR	Power Supply Rejection Ratio	$\Delta V_S = \pm 5V$	80	90		I	74	90		I	74	90		II	dB
A_{VOL}	Large Signal Voltage Gain	$R_L = 2k\Omega$, $V_O = \pm 10V$, $T_A = 25°C$	100	150		I	80	150		I	80	150		I	kV/V
		$R_L = 2k\Omega$, $V_O = \pm 10V$	70			I	60			I	70			III	kV/V
V_O	Output Voltage Swing	$R_L = 2k\Omega$	±10.0	±12.0		I	±10.0	±12.0		I	±10.0	±12.0		II	V
I_{OUT}	Output Current	$V_{OUT} = \pm 10V$, $T_A = 25°C$	±15	±22		I	±10	±18		I	±10	±18		I	mA
I_{CC}	Supply Current	$T_A = 25°C$		3	3.7	I		3	4	I		3	4	I	mA

AC Electrical Characteristics

$V_S = \pm 15V$, $R_L = 2k\Omega$, $C_L = 100pF$, $V_{OUT} = \pm 200mV$, $T_A = 25°C$, unless otherwise specified (See AC test circuit)

t_r	Rise Time			30	60	I		30	60	I		30	60	III	ns
SR	Slew Rate	$V_{OUT} = \pm 5V$	±4	±7		I	±4	±7		I	±4	±7		I	V/μs
	Unity Gain Bandwidth	$V_{OUT} < 90mV$		12		V		12		V		12		V	MHz
	Full Power Bandwidth	$V_{OUT} \pm 10V$ (Note 2)	50	75		I	50	75		I	50	75		I	kHz
	Overshoot			25	40	I		25	40	I		25	40	III	%
t_s	Settling Time	$V_{OUT} = \pm 5V$		1.5		V		1.5		V		1.5		V	μs

Note 1: Temperature drift is measured between 25°C and T_{MIN} and T_{MAX}.

Note 2: The Full Power Bandwidth is guaranteed by testing slew rate.

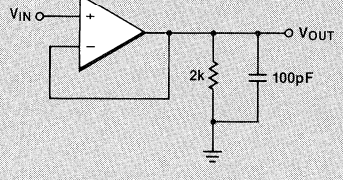

EHA260X A.C. TEST CIRCUIT

EHA2620/2622/2625

Wideband, High Impedance Operational Amplifier

Absolute Maximum Ratings

V_S	Supply Voltage	±22.5V	T_A	Operating Temperature Range:	
V_{IN}	Differential Input Voltage	±12.0V		EHA2620/22	−55°C to +125°C
P_D	Maximum Power Dissipation	300mW		EHA2625	0°C to +75°C
I_{OP}	Peak Output Current	Short Circuit Protected	T_{ST}	Storage Temperature	−65°C to +150°C
				Lead Temperature (soldering, 5 seconds)	300°C

Important Note: All parameters having Min./Max. specifications are guaranteed. The Test Level column indicates the specific device testing actually performed during production and Quality Assurance inspection. Elantec performs most electrical tests using modern high-speed automatic test equipment, specifically the LTX 77 Series system. Unless otherwise noted, all tests are pulsed tests, therefore $T_J = T_C = T_A$.

Test Level **Test Procedure**

I 100% production tested and QA sample tested per QA test plan QCX0002.

II 100% production tested at $T_A = 25°C$, and QA sample tested at $T_A = 25°C$, T_{MAX} and T_{MIN} per QA test plan QCX0002.

III QA sample tested per QA test plan QCX0002.

IV Parameter is guaranteed (but not tested) by Design and Characterization Data.

V Parameter is typical value for information purposes only.

DC Electrical Characteristics $V_S = \pm 15V$, $T_{MIN} < T_A < T_{MAX}$, unless otherwise specified

			EHA2620				EHA2622				EHA2625				
	Parameter	Test Conditions	Min.	Typ.	Max.	Test Level	Min.	Typ.	Max.	Test Level	Min.	Typ.	Max.	Test Level	Units
V_{OS}	Offset Voltage	$T_A = 25°C$		0.5	4	I		3	5	I		3	5	I	mV
					6	I			7	I			7	III	mV
$\Delta V_{OS}/\Delta T$	Offset Voltage Drift	(Note 1)		5		V		5		V		5		V	µV/°C
I_B	Bias Current	$T_A = 25°C$		1	15	I		5	25	I		5	25	I	nA
				10	35	I			60	I			40	III	nA
I_{OS}	Offset Current	$T_A = 25°C$		1	15	I		5	25	I		5	25	I	nA
				5	35	I			60	I			40	III	nA
R_{IN}	Input Resistance		65	500		IV	40	300		IV	40	300		IV	MΩ
V_{CM}	Common-Mode Range		±11.0			IV	±11.0			IV	±11.0			IV	V
CMRR	Common-Mode Rejection Ratio	$\Delta V_{CM} = \pm 10V$	80	100		I	74	100		I	74	100		II	dB

DC Electrical Characteristics $V_S = \pm 15\,V$, $T_{MIN} < T_A < T_{MAX}$, unless otherwise specified—Continued

	Parameter	Test Conditions	EHA2620 Min.	Typ.	Max.	Test Level	EHA2622 Min.	Typ.	Max.	Test Level	EHA2625 Min.	Typ.	Max.	Test Level	Units
PSRR	Power Supply Rejection Ratio	$\Delta V_S = \pm 5\,V$	80	90		I	74	90		I	74	90		II	dB
A_{VOL}	Large Signal Voltage Gain	$R_L = 2\,k\Omega$, $V_O = \pm 10\,V$, $T_A = 25°C$	100	150		I	80	150		I	80	150		I	kV/V
		$R_L = 2\,k\Omega$, $V_O = \pm 10\,V$	70			I	60			I	70			III	kV/V
V_O	Output Voltage Swing	$R_L = 2\,k\Omega$	±10.0	±12.0		I	±10.0	±12.0		I	±10.0	±12.0		II	V
I_{OUT}	Output Current	$V_{OUT} = \pm 10\,V$, $T_A = 25°C$	±15	±22		I	±10	±18		I	±10	±18		I	mA
I_{CC}	Supply Current	$T_A = 25°C$		3	3.7	I		3	4	I		3	4	I	mA

AC Electrical Characteristics

$V_S = \pm 15\,V$, $R_L = 2\,k\Omega$, $C_L = 50\,pF$, $V_{OUT} = \pm 200\,mV$, $T_A = 25°C$, unless otherwise specified (See AC test circuit)

t_r	Rise Time	$A_V = 5$		17	45	I		17	45	I		17	45	III	ns
SR	Slew Rate	$V_{OUT} = \pm 5\,V$, $A_V = 5$	±25	±35		I	±20	±35		I	±20	±35		I	V/μs
GBW	Gain Bandwidth Product	$V_O < 90\,mV$ $A_V = 100$		100		V		100		V		100		V	MHz
	Full Power Bandwidth	$V_{OUT} \pm 10\,V$ (Note 2)	400	600		I	320	600		I	320	600		I	kHz

Note 1: Temperature drift is measured between 25°C and T_{MIN} and T_{MAX}.
Note 2: The Full Power Bandwidth is guaranteed by testing slew rate.

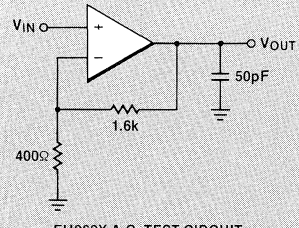

EH262X A.C. TEST CIRCUIT

Burn-In Circuit

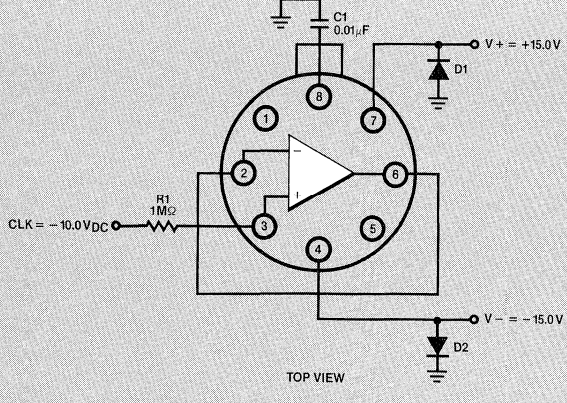

TOP VIEW

Die Layout

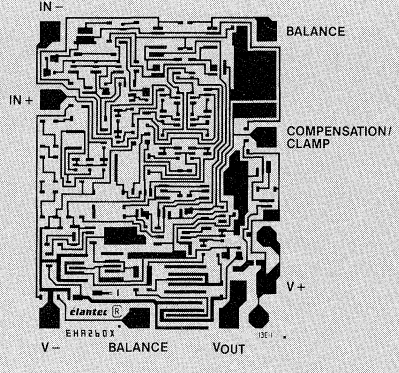

DIE SIZE: 58 x 73 MILS

ELH0021/ELH0021C

1 Amp Power Operational Amplifier

Features

- High output current—1.2 A
- Large output voltage swing—±12 V
- Low standby power—100 mW
- Wide full power bandwidth—20 kHz
- Low input bias current
- Low input offset voltage
- High open-loop gain >100 dB
- MIL-STD-883 devices 100% manufactured in U.S.A.

Ordering Information

Part No.	Temp. Range	Pkg.	Outline#
ELH0021CK	−25 to +85°C	TO-3	MDP0003
ELH0021CK/E+	−25 to +85°C	TO-3	MDP0003
ELH0021K	−55 to +125°C	TO-3	MDP0003
ELH0021K/883	−55 to +125°C	TO-3	MDP0003

General Description

The ELH0021/ELH0021C are general purpose operational amplifiers capable of delivering large output currents not usually associated with conventional IC op amps; the ELH0021 will provide output currents in excess of 1 A at voltage levels of ±12 V. In addition, both the inputs and outputs are protected against overload. The devices are compensated with a single external capacitor and are free of any unusual oscillation or latch-up problems.

The excellent input characteristics and high output capability of the ELH0021 make it an ideal choice for power applications such as DC servos, capstan drivers, deflection yoke drivers, and programmable power supplies.

Other applications include torque drivers for inertial guidance systems, diddle yoke drivers for alphanumeric CRT displays, cable drivers, and programmable power supplies for automatic test equipment.

The ELH0021 is supplied in an 8-pin TO-3 package rated at 20 W with suitable heatsink. The ELH0021 is guaranteed over the temperature range of −55°C to +125°C while the ELH0021C is guaranteed from −25°C to +85°C.

Elantec facilities comply with MIL-I-45208A and other applicable quality specifications. Elantec's Military devices are 100% fabricated and assembled in our rigidly controlled, ultra-clean facilities in Milpitas, California. For additional information on Elantec's Quality and Reliability Assurance policy and procedures request brochure QRA-1.

Connection Diagram

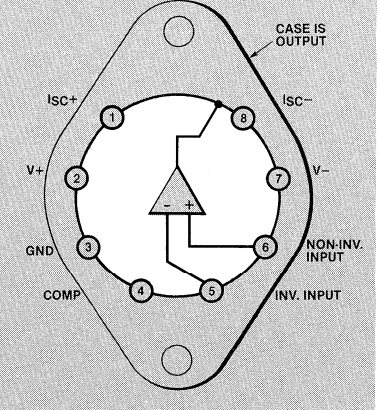

TOP VIEW

Equivalent Schematic

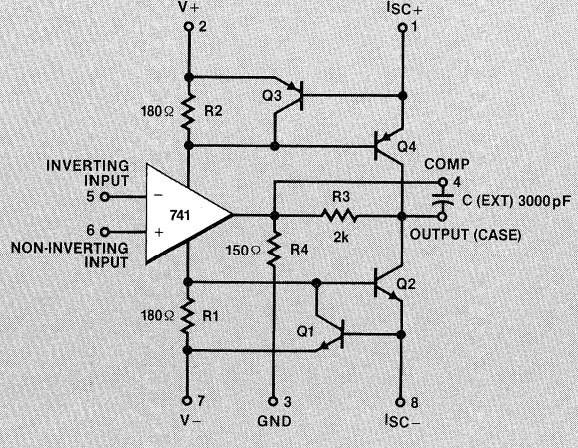

Absolute Maximum Ratings

V_S	Supply Voltage	±18 V
V_{IN}	Input Voltage (Note 1)	±15 V
P_D	Power Dissipation (See curves)	
	Differential Input Voltage	±30 V
	Peak Output Current (Note 2)	2 A
	Output Short Circuit Duration (Note 3)	Continuous
T_A	Operating Temperature Range:	
	ELH0021	−55°C to +125°C
	ELH0021C	−25°C to +85°C
T_{ST}	Storage Temperature	−65°C to +150°C
	Lead Temperature (soldering, 10 seconds)	300°C

Important Note: **All parameters having Min./Max. specifications are guaranteed. The Test Level column indicates the specific device testing actually performed during production and Quality Assurance inspection. Elantec performs most electrical tests using modern high-speed automatic test equipment, specifically the LTX 77 Series system. Unless otherwise noted, all tests are pulsed tests, therefore $T_J = T_C = T_A$.**

Test Level **Test Procedure**

I 100% production tested and QA sample tested per QA test plan QCX0002.

II 100% production tested at $T_A = 25°C$, and QA sample tested at $T_A = 25°C$, T_{MAX} and T_{MIN} per QA test plan QCX0002.

III QA sample tested per QA test plan QCX0002.

IV Parameter is guaranteed (but not tested) by Design and Characterization Data.

V Parameter is typical value for information purposes only.

DC Electrical Characteristics

$V_S = \pm 15\,V$, $T_{MIN} \leq T_A \leq T_{MAX}$, $C_C = 3000\,pF$

			ELH0021				ELH0021C				
	Parameter	Test Conditions	Min.	Typ.	Max.	Test Level	Min.	Typ.	Max.	Test Level	Units
V_{OS}	Input Offset Voltage	$R_S \leq 100\Omega$, $T_C = 25°C$ (Note 4)		1	3	I		3	6	I	mV
		$R_S \leq 100\Omega$ (Note 4)			5	I			7.5	III	mV
$\Delta V_{OS}/\Delta T$	Voltage Drift with Temperature	$R_S \leq 100\Omega$		3	25	IV		5	30	IV	µV/°C
	Offset Voltage Drift with Time	$T_A = 25°C$		5		V		5		V	$\mu V/\sqrt{wk}$
$\Delta V_{OS}/\Delta P$	Offset Voltage Change with Output Power			5	15	I		5	20	II	µV/W
I_{OS}	Input Offset Current	$T_C = 25°C$ (Note 4)		30	100	I		50	200	I	nA
		(Note 4)			300	I			500	III	nA
	Offset Current Drift with Temperature			0.1	1	IV		0.2	1	IV	nA/°C
	Offset Current Drift with Time	$T_A = 25°C$		2		V		2		V	$nA/\sqrt{wk}$
I_B	Input Bias Current	$T_C = 25°C$ (Note 4)		100	300	I		200	500	I	nA
		(Note 4)			1	I			1	III	µA
R_{IN}	Input Resistance	$T_C = 25°C$	0.3	1		I	0.3	1		I	MΩ

Note 1: Rating applies for supply voltages above ±15 V. For supplies less than ±15 V, rating is equal to supply voltage.

Note 2: Rating applies for ELH0021K with $R_{SC} = 0\Omega$.

Note 3: Rating applies as long as package power rating is not exceeded.

Note 4: Specifications apply for $\pm 5\,V \leq V_S \leq \pm 18\,V$.

Note 5: The ELH0021, like all Class B amplifiers, has a "dead band" when V_{OUT} is near 0 V. Typical values for the "dead band" are in the 50µV to 200µV range. Open-loop gain is measured at V_{OUT} from $\pm 0.5\,V_{DC}$ to $\pm 10.0\,V_{DC}$ which is out of the range of the "dead band".

ELH0021/ELH0021C

1 Amp Power Operational Amplifier

DC Electrical Characteristics—Continued

	Parameter	Test Conditions	ELH0021				ELH0021C				Units
			Min.	Typ.	Max.	Test Level	Min.	Typ.	Max.	Test Level	
CMRR	Common-Mode Rejection Ratio	$R_S \leq 100\Omega$, $V_{CM} = \pm 10V$	70	90		I	70	90		II	dB
V_{INCM}	Input Voltage Range		±12			I	±12			II	V
PSRR	Power Supply Rejection Ratio	$R_S \leq 100\Omega$, $V_S = \pm 5V$ to $\pm 15V$	80	96		I	70	90		II	dB
A_{VOL}	Voltage Gain (Note 5)	$V_O = \pm 10V$, $R_L = 1k\Omega$, $T_C = 25°C$	100	200		I	100	200		I	V/mV
		$V_O = \pm 10V$, $R_L = 100\Omega$	25			I	20			II	V/mV
V_O	Output Voltage Swing	$R_L = 100\Omega$	±13.5	14		I	±13	±14		II	V
		$R_L = 10\Omega$, $T_C = 25°C$	±11	±12		I	±10	±12		I	V
I_{SC}	Output Short Circuit Current	$T_C = 25°C$, $R_{SC} = 0.5\Omega$	0.8	1.2	1.6	I	0.8	1.2	1.6	I	A
I_S	Supply Current	$V_{OUT} = 0V$		2.5	3.5	I		3	4	II	mA
P_C	Power Consumption	$V_{OUT} = 0V$		75	105	I		90	120	II	mW

AC Electrical Characteristics

$T_A = 25°C$, $V_S = \pm 15V$, $C_C = 3000pF$

	Parameter	Test Conditions	ELH0021				ELH0021C				Units
			Min.	Typ.	Max.	Test Level	Min.	Typ.	Max.	Test Level	
S_R	Slew Rate	$A_V = 1$, $R_L = 100\Omega$	1.5	3		I	1	3		I	V/μs
BW	Bandwidth	$R_L = 100\Omega$		20		V		20		V	kHz
t_r, t_f	Small Signal Rise or Fall Time			0.3	1	I		0.3	1.5	I	μs
	Small Signal Overshoot			5	20	I		10	30	I	%
t_S	Settling Time (0.1%)	$\Delta V_{IN} = 10V$, $A_V = 1$		4		V		4		V	μs
	Overload Recovery Time			3		V		3		V	μs
HD	Harmonic Distortion	$f = 1kHz$, $P_O = 0.5W$		0.2		V		0.2		V	%
e_n	Input Noise Voltage	$R_S = 50\Omega$, BW = 10Hz to 10kHz		5		V		5		V	μV_{rms}
i_n	Input Noise Current	BW = 10Hz to 10kHz		0.05		V		0.05		V	nA_{rms}
C_{in}	Input Capacitance			3		V		3		V	pF

Typical Performance Curves

Power Derating

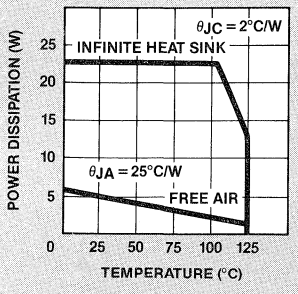

Safe Operating Area

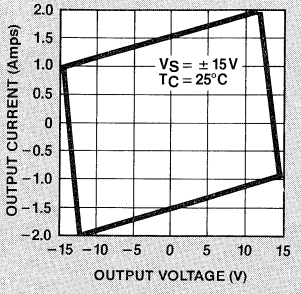

Output Voltage Swing

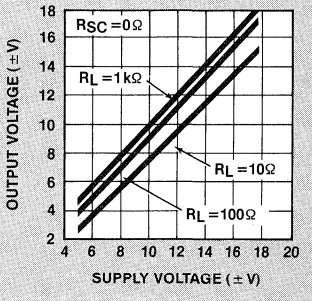

Open-Loop
Frequency Response

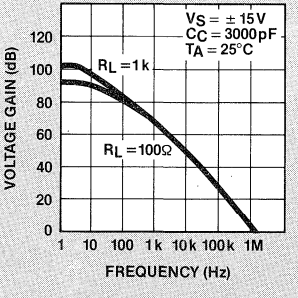

Large Signal
Frequency Response

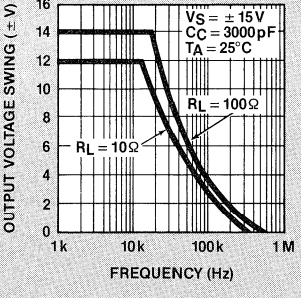

Voltage Follower
Pulse Response

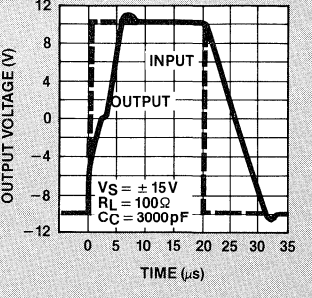

No Load Supply Current

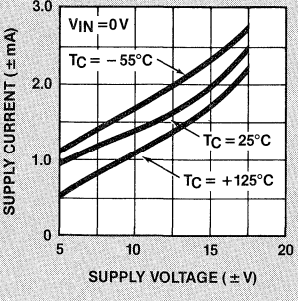

Short Circuit Current
vs Temperature

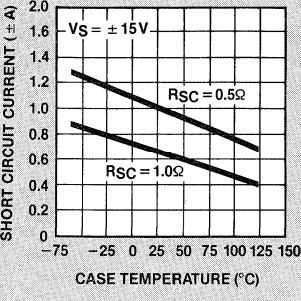

Input Bias Current

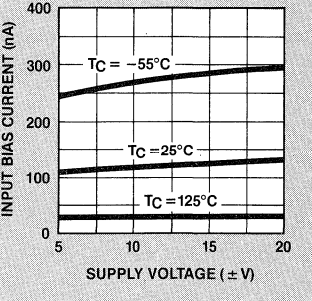

ELH0021/ELH0021C

1 Amp Power Operational Amplifier

Typical Performance Curves—Continued

Voltage Gain

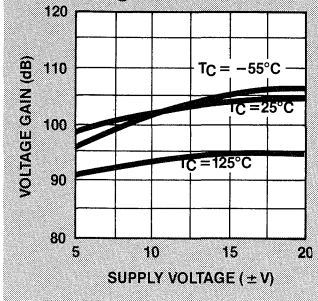

Input Current

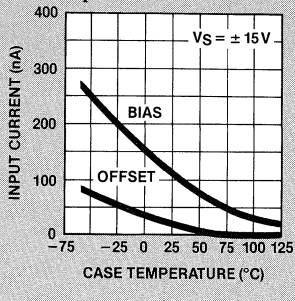

Input Voltage Range

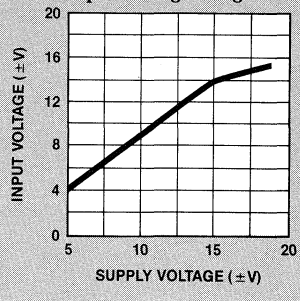

Input Noise Voltage

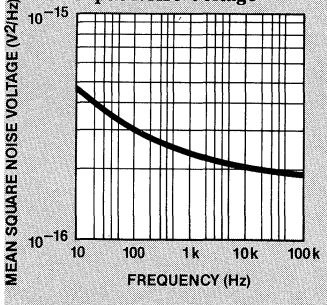

Input Noise Current

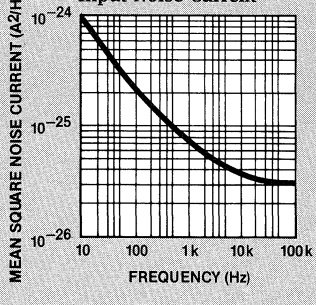

Distortion vs Frequency

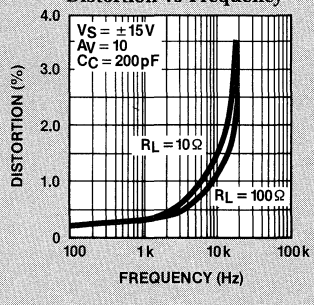

Typical Applications

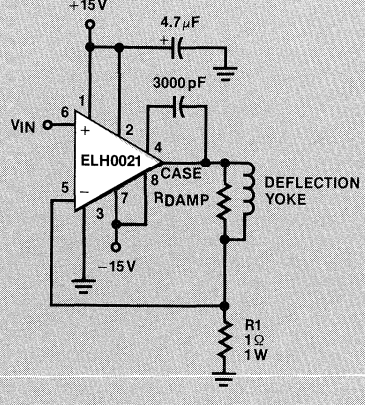

CRT Deflection Yoke Driver

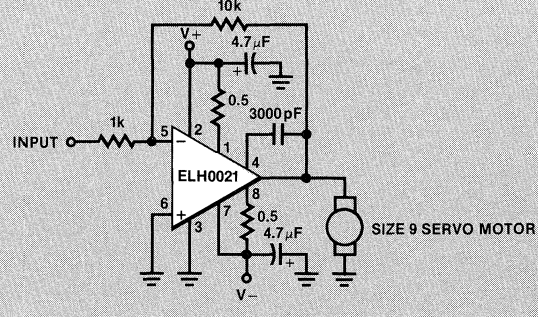

DC Servo Amplifier

Typical Applications—Continued

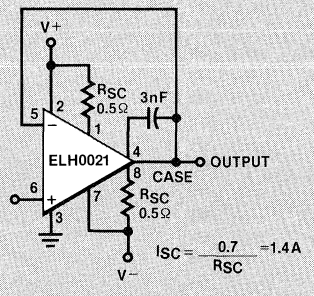

Unity Gain with Short Circuit Limiting

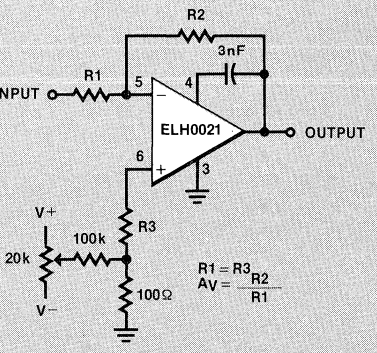

Offset Voltage Null Circuit

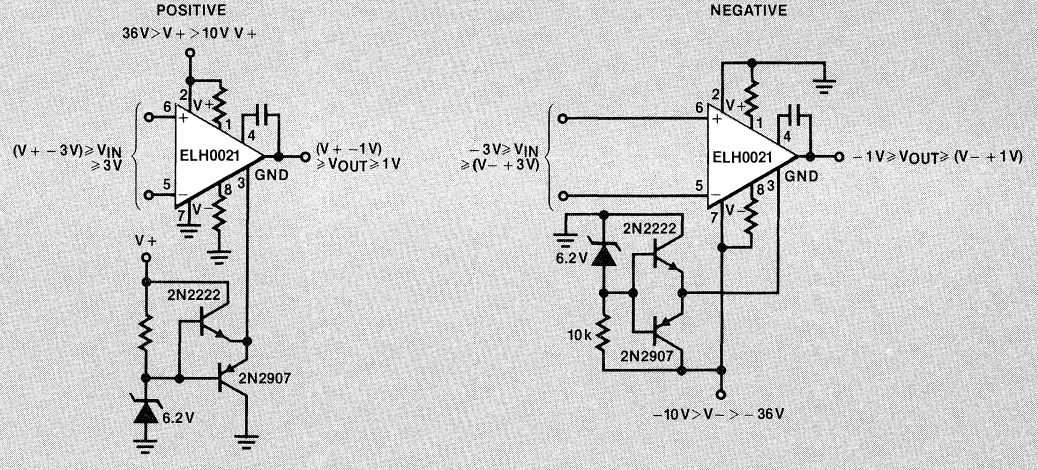

Operation from Single Supplies

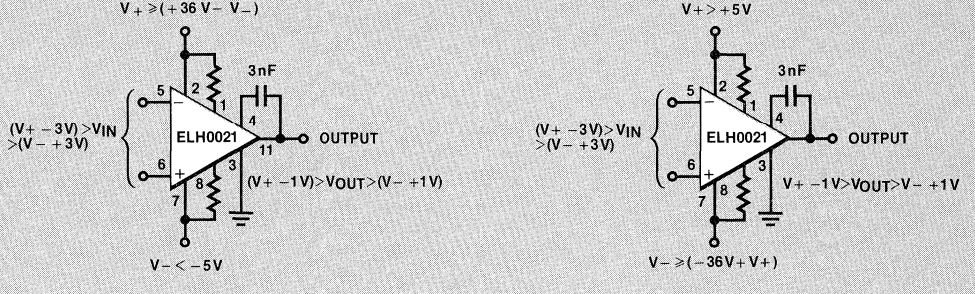

Operation from Non-Symmetrical Supplies

ELH0021/ELH0021C

1 Amp Power Operational Amplifier

Burn-In Circuit

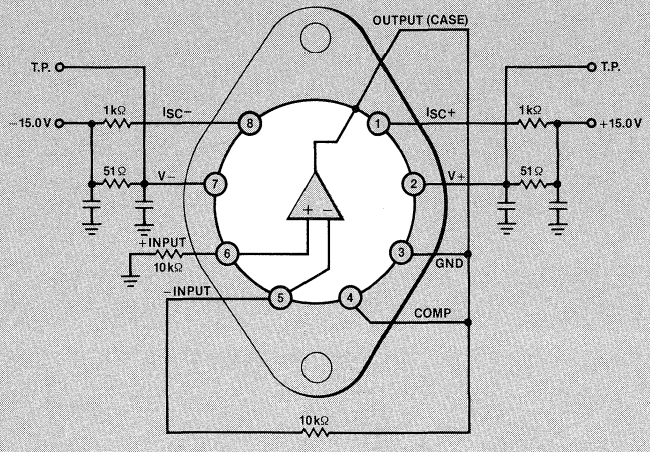

élantec
HIGH PERFORMANCE ANALOG INTEGRATED CIRCUITS

ELH0032/ELH0032C
Fast Operational Amplifier

For New Designs see the EL2006

Features

- 500 V/μs slew rate
- 70 MHz bandwidth
- $10^{12}\ \Omega$ input impedance
- 5 mV max. input offset voltage
- FET input
- Offset nulls with single pot
- No compensation required for gains above 50
- Peak output current to 100 mA
- MIL-STD-883 devices 100% manufactured in U.S.A.

Ordering Information

Part No.	Temp. Range	Pkg.	Outline#
ELH0032CG	−25 to +85°C	TO-8	MDP0002
ELH0032CG/E+	−25 to +85°C	TO-8	MDP0002
ELH0032G	−55 to +125°C	TO-8	MDP0002
ELH0032G/883	−55 to +125°C	TO-8	MDP0002

Connection Diagram

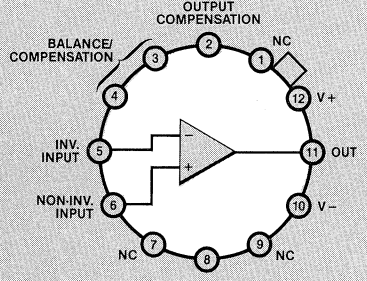

TOP VIEW

Case is electrically isolated.

General Description

The ELH0032/ELH0032C is a high slew rate, high input impedance differential operational amplifier suitable for diverse application in fast signal handling. The high allowable differential input voltage, ease of output clamping, and high output drive capability make the ELH0032/ELH0032C particularly suitable for comparator applications. It may be used in applications normally reserved for video amplifiers allowing the use of operational gain setting and frequency response shaping into the megahertz region.

The ELH0032's wide bandwidth, high input impedance and high output drive capability make it an ideal choice for applications such as summing amplifiers in high-speed D to A's, buffers in data acquisition systems, and sample and hold circuits. Additional applications include high-speed integrators and video amplifiers. The ELH0032 is guaranteed over the temperature range −55°C to +125°C and the ELH0032C is guaranteed from −25°C to +85°C.

Elantec facilities comply with MIL-I-45208A and other applicable quality specifications. Elantec's Military devices are 100% fabricated and assembled in our rigidly controlled, ultra-clean facilities in Milpitas, California. For additional information on Elantec's Quality and Reliability Assurance policy and procedures request brochure QRA–1.

Simplified Schematic

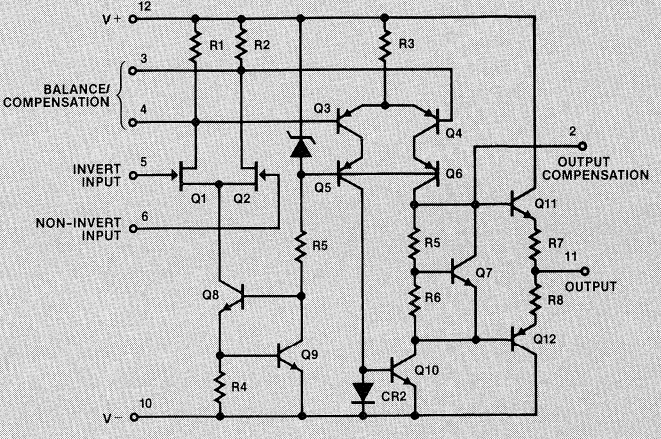

ELH0032/ELH0032C

Fast Operational Amplifier

Absolute Maximum Ratings

V_S	Supply Voltage	±18 V
V_{IN}	Input Voltage	±15 V_S
	Differential Input Voltage	±30 V or ±2 V_S
P_D	Power Dissipation (Note 1)	
	T_A = 25°C	1.5 W, derate 100°C/W to 125°C
	T_C = 25°C	2.2 W, derate 70°C/W to 125°C
T_A	Operating Temperature Range:	
	ELH0032	−55°C to +125°C
	ELH0032C	−25°C to +85°C
T_J	Operating Junction Temperature	175°C
T_{ST}	Storage Temperature	−65°C to +150°C
	Lead Temperature (soldering, 10 seconds)	300°C

Important Note: **All parameters having Min./Max. specifications are guaranteed. The Test Level column indicates the specific device testing actually performed during production and Quality Assurance inspection. Elantec performs most electrical tests using modern high-speed automatic test equipment, specifically the LTX 77 Series system. Unless otherwise noted, all tests are pulsed tests, therefore $T_J = T_C = T_A$.**

Test Level **Test Procedure**

I 100% production tested and QA sample tested per QA test plan QCX0002.

II 100% production tested at T_A = 25°C, and QA sample tested at T_A = 25°C, T_{MAX} and T_{MIN} per QA test plan QCX0002.

III QA sample tested per QA test plan QCX0002.

IV Parameter is guaranteed (but not tested) by Design and Characterization Data.

V Parameter is typical value for information purposes only.

DC Electrical Characteristics $V_S = \pm 15\,V$, $T_{MIN} \leq T_A \leq T_{MAX}$, $V_{IN} = 0\,V$

			ELH0032				ELH0032C				
	Parameter	Test Conditions	Min.	Typ.	Max.	Test Level	Min.	Typ.	Max.	Test Level	Units
V_{OS}	Input Offset Voltage	T_J = 25°C (Note 2)		2	5	I		2	15	I	mV
					10	I			20	III	mV
$\Delta V_{OS}/\Delta T$	Average Offset Voltage Drift			25	150	I		25		V	µV/°C
I_{OS}	Input Offset Current	T_J = 25°C (Note 2)			25	I			50	I	pA
		T_A = 25°C (Note 3)			250	IV			500	IV	pA
		$T_J = T_{MAX}$			25	I			5	III	nA
I_B	Input Bias Current	T_J = 25°C (Note 2)			100	I			500	I	pA
		T_A = 25°C (Note 3)			1	IV			5	IV	nA
		$T_J = T_{MAX}$			50	I			15	III	nA
V_{INCM}	Input Voltage Range		±10	±12		I	±10	±12		II	V
CMRR	Common-Mode Rejection Ratio	$V_{IN} = \pm 10\,V$	50	60		I	50	60		II	dB
A_{VOL}	Open-Loop Voltage Gain	$V_O = \pm 10\,V$, $R_L = 1\,k\Omega$, T_J = 25°C	48	60		I	48	60		I	dB
		$V_O = \pm 10\,V$, $R_L = 1\,k\Omega$	45			I	45			III	dB
		$V_O = \pm 10\,V$, f = 1 kHz, $R_L = 1\,k\Omega$, T_J = 25°C	60	70		I	60	70		I	dB
		$V_O = \pm 10\,V$, f = 1 kHz, $R_L = 1\,k\Omega$	57			I	57			III	dB
V_O	Output Voltage Swing	$R_L = 1\,k\Omega$	±10	±13.5		I	±10	±13		II	V
I_S	Power Supply Current	T_J = 25°C, I_O = 0 mA		21	23	I		23	25	I	mA
		T_A = 25°C, I_O = 0 mA (Note 3)		18	20	IV		20	22	IV	mA
PSRR	Power Supply Rejection Ratio	$\pm 5\,V \leq V_S \leq 15\,V$	50	60		I	50	60		II	dB
		$+5\,V \leq V_S(+) \leq +20\,V$, $V_S(-) = -15\,V$	50			I	50			II	dB
		$-5\,V \geq V_S(-) \geq -20\,V$, $V_S(+) = +15\,V$	50			I	50			II	dB

AC Electrical Characteristics

$V_S = \pm 15V$, $R_L = 1k\Omega$, $T_J = 25°C$

	Parameters	Test Conditions	Min.	Typ.	Max.	Test Level	Units
S_R	Slew Rate	$A_V = +1$, $\Delta V_{IN} = 20V$	350	500		I	V/μs
t_S	Settling Time to 1% of Final Value	$A_V = -1$, $\Delta V_{IN} = 20V$		100	500	IV	ns
t_S	Settling Time to 0.1% of Final Value	$A_V = -1$, $\Delta V_{IN} = 20V$		300		V	ns
t_R	Small Signal Rise Time	$A_V = +1$, $\Delta V_{IN} = 1V$		8	20	I	ns
t_D	Small Signal Delay Time	$A_V = +1$, $\Delta V_{IN} = 1V$		10	25	I	ns

Note 1: In order to limit maximum junction temperature to +175°C, it may be necessary to operate with $V_S < \pm 15V$ when T_A or T_C exceeds specific values depending on the P_D within the device package. Total P_D is the sum of quiescent and load-related dissipation.

Note 2: Specification is at 25°C junction temperature due to requirements of high-speed automatic testing. Actual values at operating temperature will exceed the value at $T_J = 25°C$. When supply voltage are ±15V, no-load operating junction temperature may rise 40-60°C above ambient and more under load conditions. Accordingly, V_{OS} may change one to several mV, and I_B and I_{OS} will change significantly during warm-up. Refer to I_B and I_{OS} vs. temperature graph for expected values.

Note 3: Measured in still air 7 minutes after application of power.

Typical Performance Curves

Maximum Power Dissipation

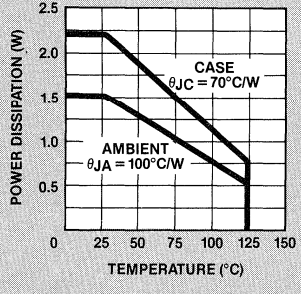

Supply Current vs Supply Voltage

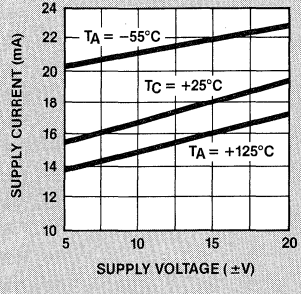

Input Voltage Range & Output Voltage vs Supply Voltage

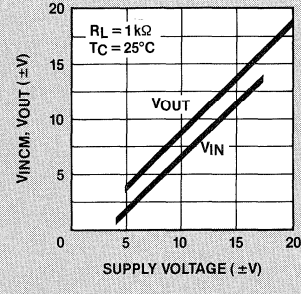

Bode Plot (Uncompensated)

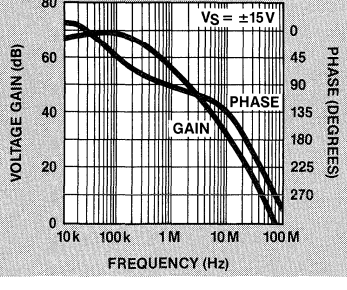

Bode Plot (Unity Gain Compensation)

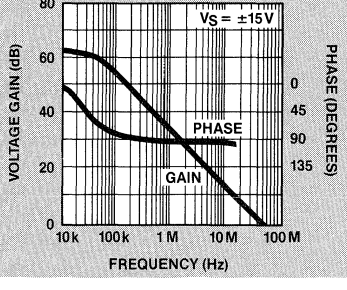

Large Signal Frequency Response

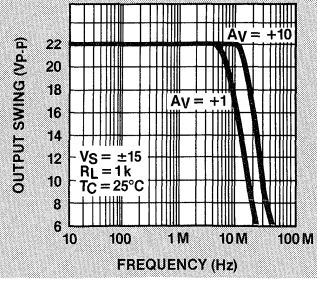

ELH0032/ELH0032C
Fast Operational Amplifier

Typical Performance Curves —Continued

Common Mode Rejection Ratio vs Frequency

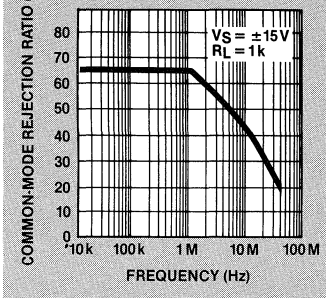

Large Signal Pulse Response

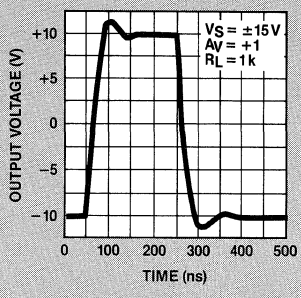

Large Signal Pulse Response

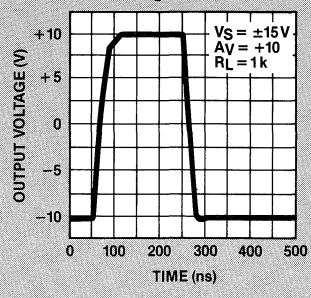

Normalized Input Bias and Offset Current vs Junction Temperature

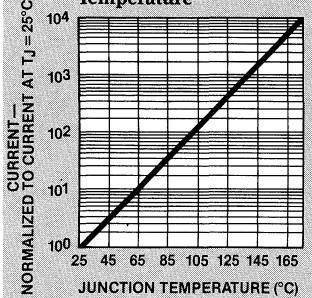

Normalized Input Bias Current During Warm-Up

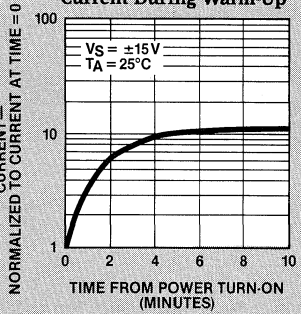

Input Bias Current vs Input Voltage

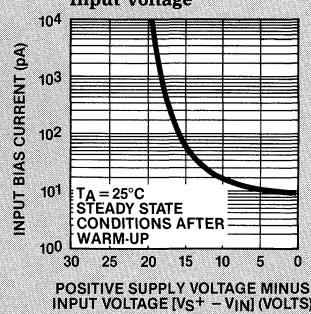

Total Input Noise Voltage vs Frequency*

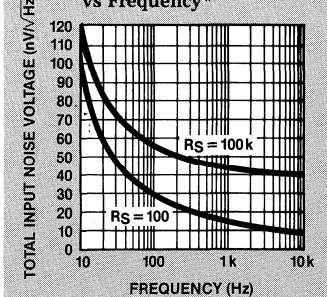

*Noise voltage includes contribution from source resistance.

Auxiliary Circuits

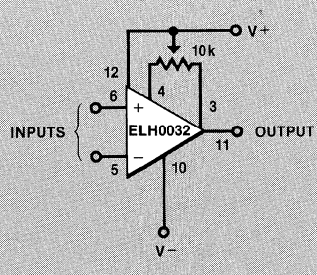

Offset Null

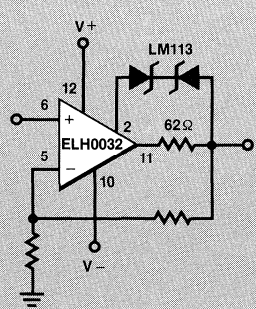

Output Short Circuit Protection

Typical Applications

Unity Gain Amplifier

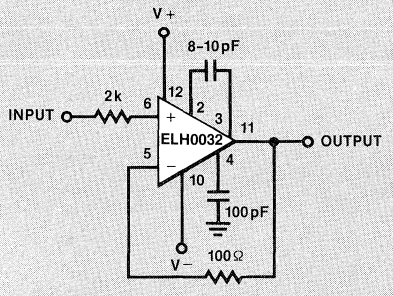

TYP $BW_{3\,dB}$ = 45 MHz

100X Buffer Amplifier

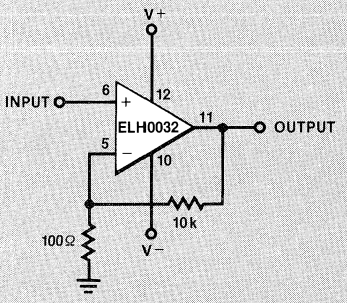

TYP $BW_{3\,dB}$ = 10 MHz

10X Buffer Amplifier

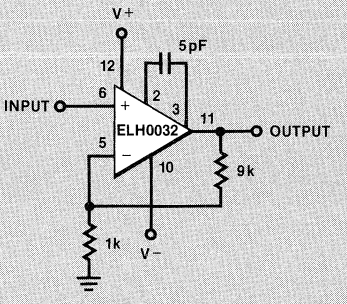

TYP $BW_{3\,dB}$ = 5 MHz

Non-Compensated Unity Gain Inverter

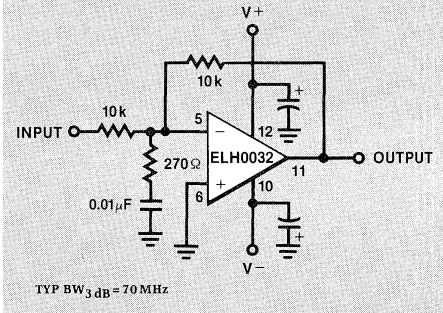

TYP $BW_{3\,dB}$ = 70 MHz

High-Speed Sample and Hold

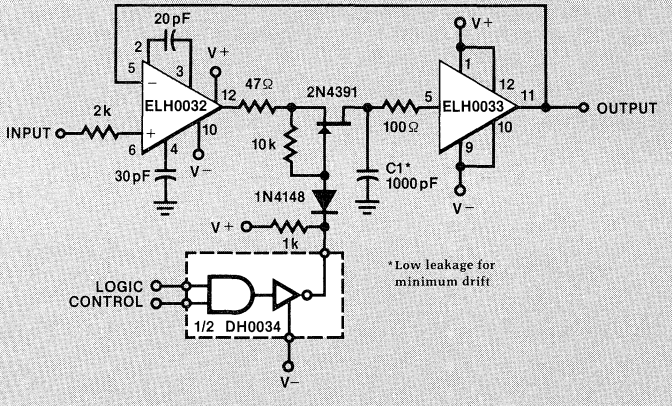

*Low leakage for minimum drift

High-Speed Current Mode MUX

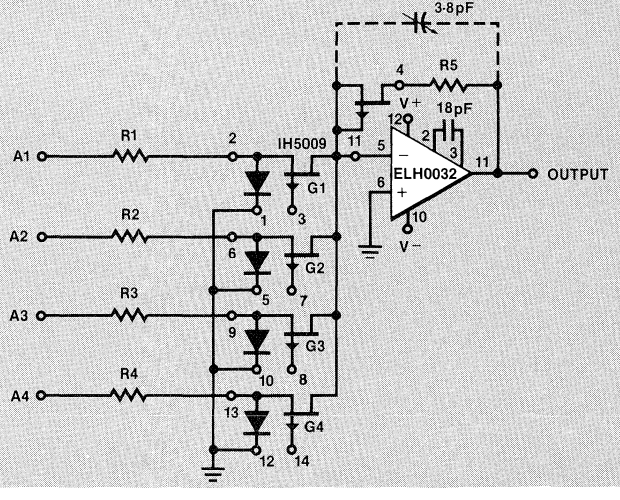

ELH0032/ELH0032C
Fast Operational Amplifier

Applications Information

Power Supply Decoupling

The ELH0032/ELH0032C, like most high-speed circuits, is sensitive to layout and stray capacitance. Power supplies should be bypassed as near to pins 10 and 12 as possible with low inductance capacitors such as 0.01 μF disc ceramics. Compensation components should also be located close to the appropriate pins to minimize stray reactances.

Input Current

Because the input devices are FETs, the input bias current may be expected to double for each 11°C junction temperature rise. This characteristic is plotted in the typical performance characteristics graphs. The device will self-heat due to internal power dissipation after application of power, thus raising the FET junction temperature 40–60°C above the free-air ambient temperature when supplies are ±15 V. The device temperature will stabilize within 5–10 minutes after application of power, and the input bias currents measured at the time will be indicative of normal operating currents. An additional rise will occur as power is delivered to a load due to additional internal power dissipation.

There is an additional effect on input bias current as the input voltage is changed. The effect, common to all FETs, is an avalanche-like increase in gate current as the FET gate-to-drain voltage is increased above a critical value, depending on FET geometry and doping levels. This effect will be noted as the input voltage of the ELH0032 is taken below ground potential when the supplies are ±15 V. All of the effects described here may be minimized by operating the device with $V_S \leq \pm 15$ V.

These effects are indicated in the typical performance curves.

Input Capacitance

The input capacitance to the ELH0032/ELH0032C is typically 5 pF and thus may form a significant time constant with high value resistors. For optimum performance, the input capacitance to the inverting input should be compensated by a small capacitor across the feedback resistor. The value is strongly dependent on layout and closed loop gain, but will typically be in the neighborhood of several picofarads.

In the non-inverting configuration, it may be advantageous to bootstrap the case and/or a guard conductor to the inverting input. This serves both to divert leakage currents away from the non-inverting input and to reduce the effective input capacitance. A unity gain follower so treated will have an input capacitance under a 1 pF.

Heatsinking

While the ELH0032/ELH0032C is specified for operation without any explicit heatsink, internal power dissipation does cause a significant temperature rise. Improved bias current performance can thus be obtained by limiting this temperature rise with a small heat sink such as the Thermalloy No. 2241 or equivalent. The case of the device has no internal connection, so it may be electrically connected to the sink if this is advantageous. Be aware, however, that this will affect the stray capacitances to all pins and may thus require adjustment of circuit compensation values.

Burn-In Circuit

(Functional Diagram)

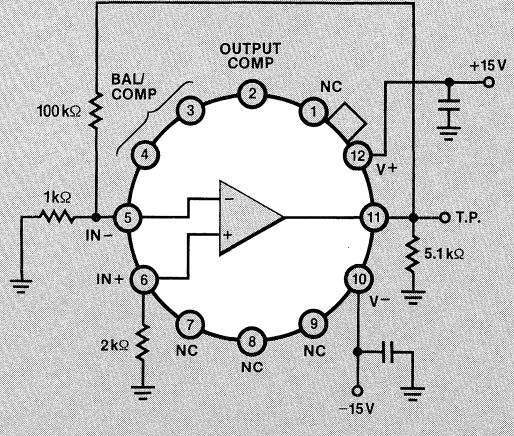

élantec
HIGH PERFORMANCE ANALOG INTEGRATED CIRCUITS

ELH0041/ELH0041C

0.1 Amp Power Operational Amplifier

Features

- High output current—200 mA
- Excellent open-loop gain—106 dB
- Low offset voltage—1 mV
- Wide full power bandwidth—20 kHz
- High slew rate—3 V/μs
- MIL-STD-883 devices 100% manufactured in U.S.A.

Ordering Information

Part No.	Temp. Range	Pkg.	Outline#
ELH0041CG	−25 to +85°C	TO-8	MDP0002
ELH0041CG/E+	−25 to +85°C	TO-8	MDP0002
ELH0041G	−55 to +125°C	TO-8	MDP0002
ELH0041G/883	−55 to +125°C	TO-8	MDP0002

Connection Diagram

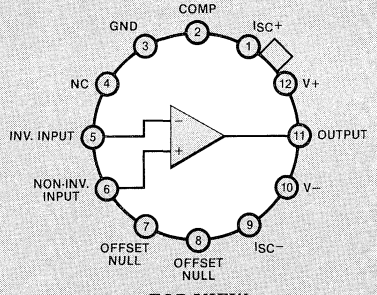

TOP VIEW

Case is electrically isolated.

General Description

The ELH0041/ELH0041C are general purpose operational amplifiers capable of delivering large output currents not usually associated with conventional IC op amps; the ELH0041 delivers currents of 200 mA at voltage levels closely approaching the available power supplies. In addition, both the inputs and outputs are protected against overload. These devices are compensated with a single external capacitor and are free of any unusual oscillation or latch-up problems.

For applications requiring output currents in excess of 1 A, see the ELH0021 data sheet.

The excellent input characteristics and high output capability of the ELH0041 make it an ideal choice for power applications such as DC servos, capstan drivers, deflection yoke drivers, and programmable power supplies.

The ELH0041 is particularly suited for applications such as torque drivers for inertial guidance systems, diddle yoke drivers for alphanumeric CRT displays, cable drivers, and programmable power supplies for automatic test equipment.

The ELH0041 is supplied in a 12-pin TO-8 package (2.5 W with clip-on heatsink). The ELH0041 is guaranteed over the temperature range of −55°C to +125°C while the ELH0041C is guaranteed from −25°C to +85°C.

Elantec facilities comply with MIL-I-45208A and other applicable quality specifications. Elantec's Military devices are 100% fabricated and assembled in our rigidly controlled, ultra-clean facilities in Milpitas, California. For additional information on Elantec's Quality and Reliability Assurance policy and procedures request brochure QRA–1.

Burn-In Circuit

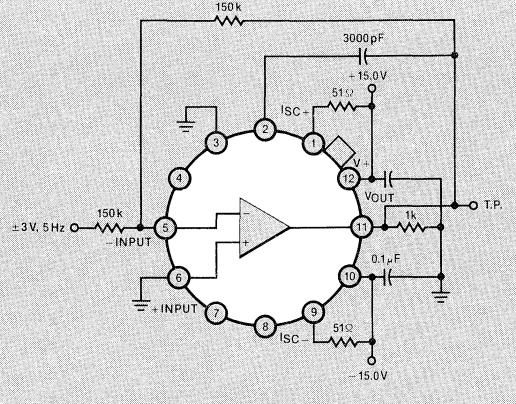

Equivalent Schematic

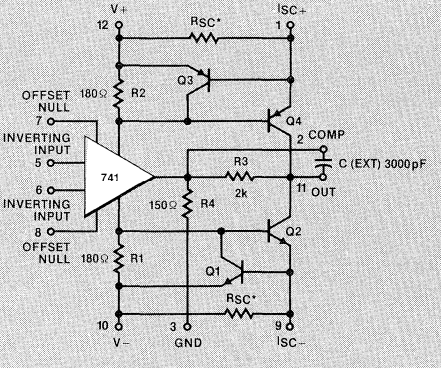

ELH0041/ELH0041C

0.1 Amp Power Operational Amplifier

Absolute Maximum Ratings

V_S	Supply Voltage	±18 V		Output Short Circuit Duration (Note 3)	Continuous
V_{IN}	Input Voltage (Note 1)	±15 V	T_A	Operating Temperature Range:	
P_D	Power Dissipation (See curves)			ELH0041	−55°C to +125°C
	Differential Input Voltage	±30 V		ELH0041C	−25°C to +85°C
	Peak Output Current (Note 2)	0.5 A	T_{ST}	Storage Temperature	−65°C to +150°C
				Lead Temperature (soldering, 10 seconds)	300°C

Important Note: **All parameters having Min./Max. specifications are guaranteed. The Test Level column indicates the specific device testing actually performed during production and Quality Assurance inspection. Elantec performs most electrical tests using modern high-speed automatic test equipment, specifically the LTX 77 Series system. Unless otherwise noted, all tests are pulsed tests, therefore $T_J = T_C = T_A$.**

Test Level	Test Procedure
I	100% production tested and QA sample tested per QA test plan QCX0002.
II	100% production tested at $T_A = 25°C$, and QA sample tested at $T_A = 25°C$, T_{MAX} and T_{MIN} per QA test plan QCX0002.
III	QA sample tested per QA test plan QCX0002.
IV	Parameter is guaranteed (but not tested) by Design and Characterization Data.
V	Parameter is typical value for information purposes only.

DC Electrical Characteristics

$V_S = \pm 15\,V$, $T_{MIN} \leq T_A \leq T_{MAX}$, $C_C = 3000\,pF$

			ELH0041				ELH0041C				
	Parameter	Test Conditions	Min.	Typ.	Max.	Test Level	Min.	Typ.	Max.	Test Level	Units
V_{OS}	Input Offset Voltage	$R_S \leq 100\,\Omega$, $T_A = 25°C$ (Note 4)		1	3	I		3	6	I	mV
		$R_S \leq 100\,\Omega$ (Note 4)			5	I			7.5	III	mV
$\Delta V_{OS}/\Delta T$	Voltage Drift with Temperature	$R_S \leq 100\,\Omega$		3		V		5		V	µV/°C
	Offset Voltage Drift with Time	$T_A = 25°C$		5		V		5		V	$\mu V/\sqrt{wk}$
$\Delta V_{OS}/\Delta P$	Offset Voltage Change with Output Power			15		V		15		V	µV/W
	Offset Voltage Adjustment Range			20		V		20		V	mV
I_{OS}	Input Offset Current	$T_A = 25°C$ (Note 4)		30	100	I		50	200	I	nA
		(Note 4)			300	I			500	III	nA
	Offset Current Drift with Temperature			0.1	1	IV		0.2	1	IV	nA/°C
	Offset Current Drift with Time	$T_A = 25°C$		2		V		2		V	$nA/\sqrt{wk}$
I_B	Input Bias Current	$T_A = 25°C$ (Note 4)		100	300	I		200	500	I	nA
		(Note 4)			1	I			1	III	µA
R_{IN}	Input Resistance	$T_A = 25°C$	0.3	1		I	0.3	1		I	MΩ

Note 1: Rating applies for supply voltages above ±15 V. For supplies less than ±15 V, rating is equal to supply voltage.

Note 2: Rating applies for LH0041G with $R_{SC} = 0\,\Omega$.

Note 3: Rating applies as long as package power rating is not exceeded.

Note 4: Specifications apply for $\pm 5\,V \leq V_S \leq 18\,V$.

Note 5: The ELH0041, like all Class B amplifiers, has a "dead band" when V_{OUT} is near zero volts.Typical values for the "dead band" are in the 50µV to 200µV range. Open-loop gain is measured at V_{OUT} from $\pm 0.5\,V_{DC}$ to $\pm 10\,V_{DC}$ which is out of the range of the "dead band".

DC Electrical Characteristics—Continued

	Parameter	Test Conditions	ELH0041				ELH0041C				Units
			Min.	Typ.	Max.	Test Level	Min.	Typ.	Max.	Test Level	
CMRR	Common-Mode Rejection Ratio	$R_S \leq 100\Omega$, $V_{CM} = \pm 10V$	70	90		I	70	90		II	dB
V_{INCM}	Input Voltage Range		±12			I	±12			II	V
PSRR	Power Supply Rejection Ratio	$R_S \leq 100\Omega$, $V_S = \pm 5V$ to $\pm 15V$	80	96		I	70	90		II	dB
A_V	Voltage Gain (Note 5)	$V_O = \pm 10V$, $R_L = 1k\Omega$, $T_A = 25°C$	100	200		I	100	200		I	V/mV
		$V_O = \pm 10V$, $R_L = 100\Omega$	25			I	20			II	V/mV
V_O	Output Voltage Swing	$R_L = 100\Omega$	±13	14		I	±13	±14		II	V
I_{SC}	Output Short Circuit Current	$T_A = 25°C$, $R_{SC} = 3.3\Omega$		200	300	I		200	300	I	mA
I_S	Supply Current	$V_{OUT} = 0V$		2.5	3.5	I		3	4	II	mA
P_C	Power Consumption	$V_{OUT} = 0V$		75	105	I		90	120	II	mW

AC Electrical Characteristics

$T_A = 25°C$, $V_S = \pm 15V$, $C_C = 3000pF$

	Parameter	Test Conditions	ELH0041				ELH0041C				Units
			Min.	Typ.	Max.	Test Level	Min.	Typ.	Max.	Test Level	
S_r	Slew Rate	$A_V = 1$, $R_L = 100\Omega$	1.5	3		I	1	3		I	V/μs
BW	Bandwidth	$R_L = 100\Omega$		20		V		20		V	kHz
t_r, t_f	Small Signal Rise or Fall Time			0.3	1	I		0.3	1.5	I	μs
	Small Signal Overshoot			5	20	I		10	30	I	%
t_S	Settling Time (0.1%)	$\Delta V_{IN} = 10V$, $A_V = 1$		4		V		4		V	μs
	Overload Recovery Time			3		V		3		V	μs
HD	Harmonic Distortion	$f = 1kHz$, $P_O = 0.5W$		0.2		V		0.2		V	%
e_n	Input Noise Voltage	$R_S = 50\Omega$, BW = 10Hz to 10kHz		5		V		5		V	μV_{rms}
i_n	Input Noise Current	BW = 10Hz to 10kHz		0.05		V		0.05		V	nA_{rms}
C_{in}	Input Capacitance			3		V		3		V	pF

ELH0041/ELH0041C

0.1 Amp Power Operational Amplifier

Typical Performance Curves

Power Dissipation

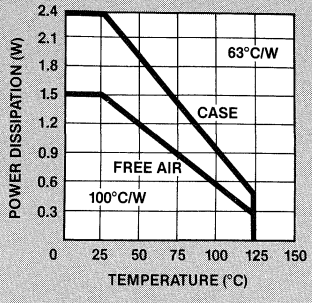

Output Voltage Swing

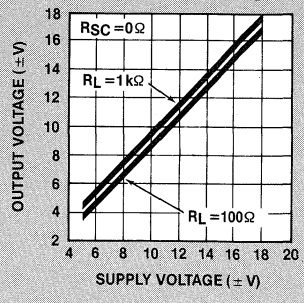

Open-Loop Frequency Response

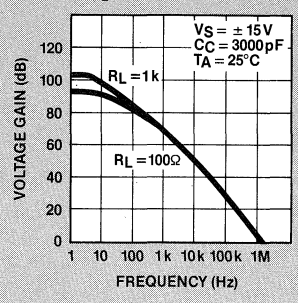

Large Signal Pulse Response

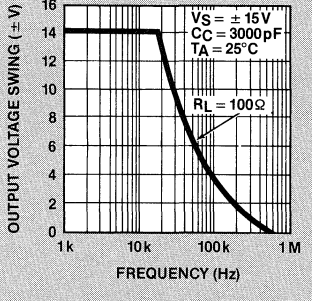

Voltage Follower Pulse Response

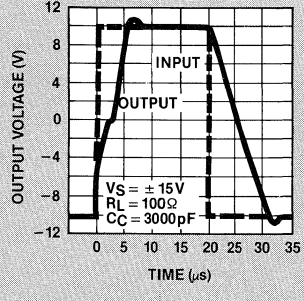

No Load Supply Current

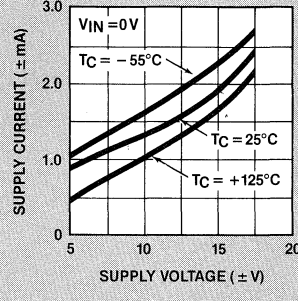

Short Circuit Current vs Temperature

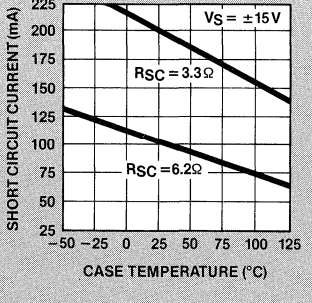

Input Bias Current

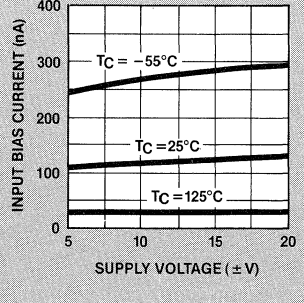

Voltage Gain

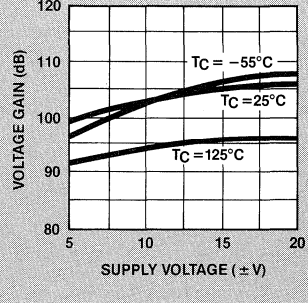

Typical Performance Curves—Continued

Input Current

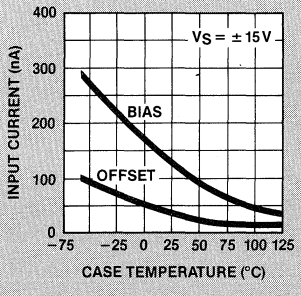

Input Voltage Range

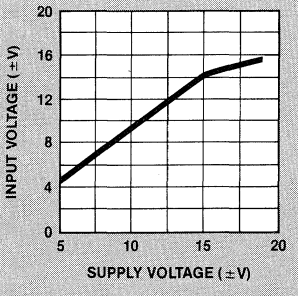

Input Noise Voltage

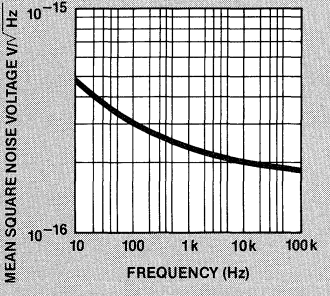

Input Noise Current

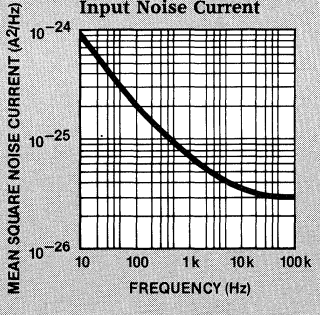

Distortion vs Frequency

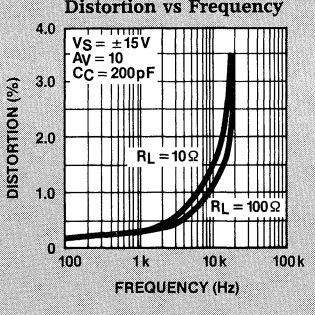

Typical Applications

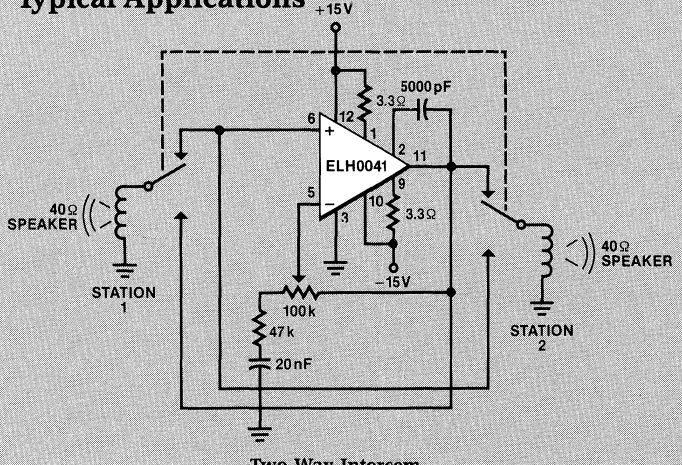

Two Way Intercom

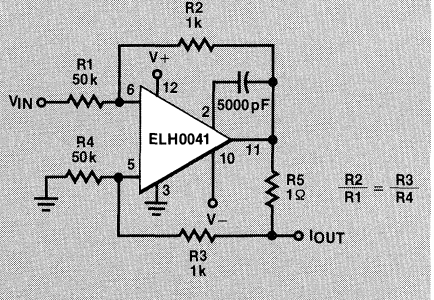

$$I_{OUT} = \frac{V_{IN}}{R5}\left(\frac{R2}{R1}\right) + \frac{V_{OUT}}{R1 + R2} = 20\,mA/V_{IN}$$

Programmable High Current Source/Sink

ELH0041/ELH0041C

0.1 Amp Power Operational Amplifier

Typical Applications—Continued

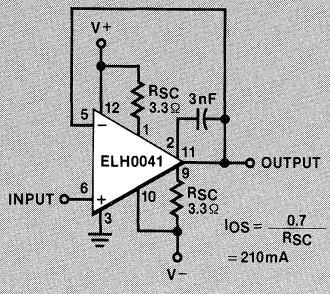

Unity Gain with Short Circuit Limiting

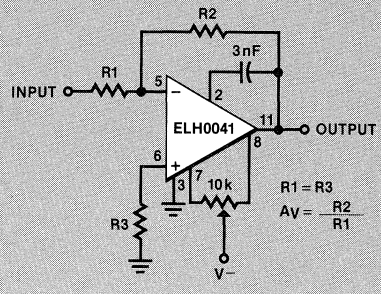

Offset Voltage Null Circuit

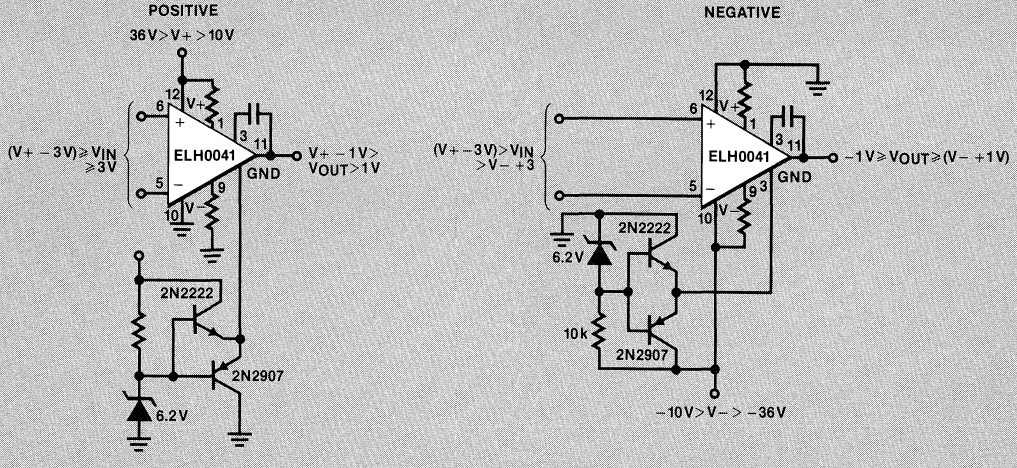

Operation from Single Supplies

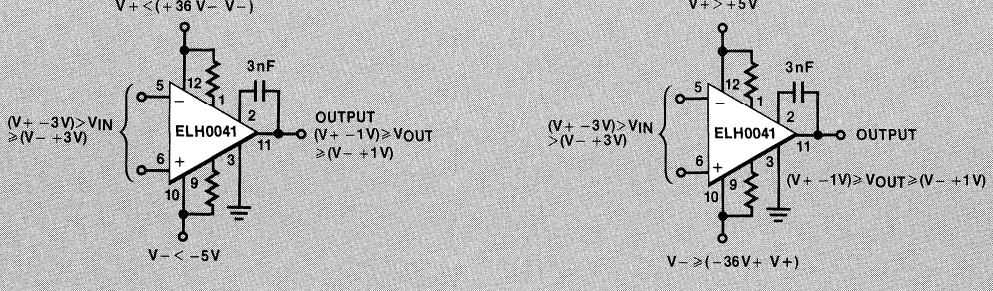

Operation from Non-Symmetrical Supplies

élantec
HIGH PERFORMANCE ANALOG INTEGRATED CIRCUITS

ELH0101 /ELH0101A

Power Operational Amplifier

Features

- 5 A peak, 2 A continuous output current
- 10 V/μs slew rate
- 300 kHz power bandwidth
- 850 mW standby power (±15 V supplies)
- 300 pA input bias current
- Virtually no crossover distortion
- 2μs settling time to 0.01%
- 5 MHz gain bandwidth
- MIL-STD-883 devices 100% manufactured in U.S.A.

Ordering Information

Part No.	Temp. Range	Pkg.	Outline#
ELH0101ACK	−25 to +85°C	TO-3	MDP0003
ELH0101ACK/E+	−25 to +85°C	TO-3	MDP0003
ELH0101AK	−55 to +125°C	TO-3	MDP0003
ELH0101AK/883	−55 to +125°C	TO-3	MDP0003
ELH0101CK	−25 to +85°C	TO-3	MDP0003
ELH0101CK/E+	−25 to +85°C	TO-3	MDP0003
ELH0101K	−55 to +125°C	TO-3	MDP0003
ELH0101K/883	−55 to +125°C	TO-3	MDP0003

Connection Diagram

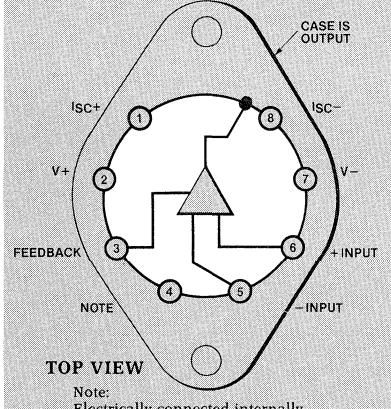

TOP VIEW

Note:
Electrically connected internally.
No connection should be made to pin.

General Description

The ELH0101 is a wideband power operational amplifier featuring FET inputs, internal compensation, virtually no crossover distortion, and rapid settling time. These features make the ELH0101 an ideal choice for DC or AC servo amplifiers, deflection yoke drivers, programmable power supplies, and disk head positioner amplifiers. The ELH0101 is packaged in an 8-pin TO-3 hermetic package, rated at 20 W with a suitable heatsink.

Elantec facilities comply with MIL-I-45208A and other applicable quality specifications. Elantec's Military devices are 100% fabricated and assembled in our rigidly controlled, ultra-clean facilities in Milpitas, California. For additional information on Elantec's Quality and Reliability Assurance policy and procedures request brochure QRA–1.

Equivalent Schematic

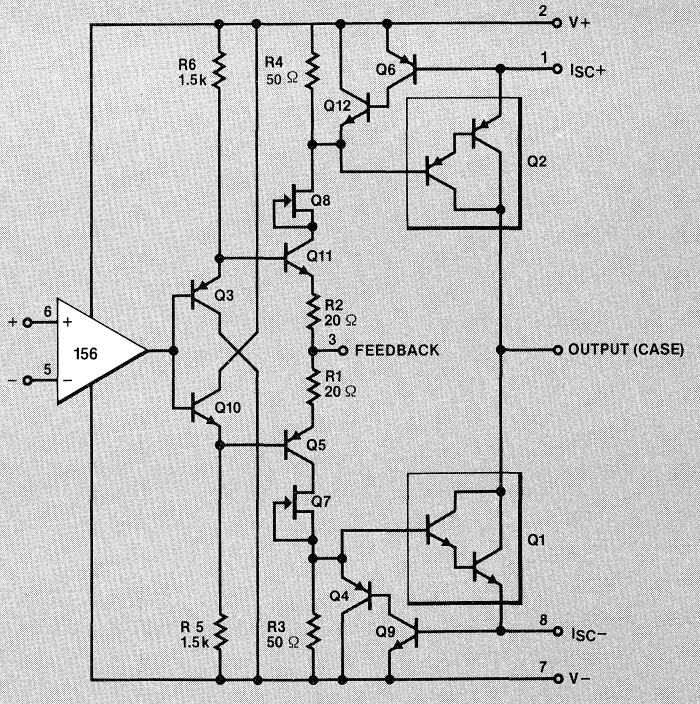

ELH0101/ELH0101A

Power Operational Amplifier

Absolute Maximum Ratings

V_S	Supply Voltage	ELH0101C, ELH0101AC	±18 V
		ELH0101, ELH0101A	±22 V
P_D	Power Dissipation at T_A=25°C		5 W
	Derate linearly at 25°C/W to zero at 150°C		
P_D	Power Dissipation at T_C=25°C		62 W
	Derate linearly at 2°C/W to zero at 150°C		
	Differential Input Voltage		
	ELH0101C, ELH0101AC		±30 V but < $\pm V_S$
	ELH0101, ELH0101A		±40 V but < $\pm V_S$
V_{IN}	Input Voltage Range		
	ELH0101C, ELH0101AC		±15 V but < $\pm V_S$
	ELH0101, ELH0101A		±20 V but < $\pm V_S$
	Peak Output Current (50 ms pulse)		5 A
	Output Short Circuit Duration (within rated power dissipation, R_{SC}−0.35Ω, T_A=25°C)		Continuous
T_A	Operating Temperature Range:		
	ELH0101C, ELH0101AC		−25°C to +85°C
	ELH0101, ELH0101A		−55°C to +125°C
T_J	Maximum Junction Temperature		150°C
T_{ST}	Storage Temperature		−65°C to +150°C
	Lead Temperature (soldering, &10 seconds)		300°C

Important Note: **All parameters having Min./Max. specifications are guaranteed. The Test Level column indicates the specific device testing actually performed during production and Quality Assurance inspection. Elantec performs most electrical tests using modern high-speed automatic test equipment, specifically the LTX 77 Series system. Unless otherwise noted, all tests are pulsed tests, therefore $T_J = T_C = T_A$.**

Test Level	Test Procedure
I	100% production tested and QA sample tested per QA test plan QCX0002.
II	100% production tested at T_A=25°C, and QA sample tested at T_A=25°C, T_{MAX} and T_{MIN} per QA test plan QCX0002.
III	QA sample tested per QA test plan QCX0002.
IV	Parameter is guaranteed (but not tested) by Design and Characterization Data.
V	Parameter is typical value for information purposes only.

DC Electrical Characteristics (Note 1) V_S=±15 V, T_A=25°C, V_{CM}=0 V

	Parameter	Test Conditions	ELH0101A, AC				ELH0101, C				Units
			Min.	Typ.	Max.	Test Level	Min.	Typ.	Max.	Test Level	
V_{OS}	Input Offset Voltage			1	3	I		5	10	I	mV
		$T_{MIN} \leq T_A \leq T_{MAX}$, ELH0101, A			7	I			15	I	mV
		$T_{MIN} \leq T_A \leq T_{MAX}$, ELH0101C, AC			7	III			15	III	mV
$\Delta V_{OS}/\Delta P_D$	Change in Input Offset Voltage with Dissipated Power	(Note 2)		150		V		300		V	μV/W
$\Delta V_{OS}/\Delta T$	Change in Input Offset Voltage with Temperature			10		V		10		V	μV/°C
I_B	Input Bias Current				300	I			1000	I	pA
		$T_A \leq T_{MAX}$, ELH0101C, AC			60	III			60	III	nA
		$T_A \leq T_{MAX}$, ELH0101, A			300	I			1000	I	nA
I_{OS}	Input Offset Current				75	I			250	I	pA
		$T_A \leq T_{MAX}$, ELH0101C, AC			15	III			15	III	nA
		$T_A \leq T_{MAX}$, ELH0101,A			75	I			250	I	nA
A_{VOL}	Large Signal Voltage Gain	V_O=±10 V, R_L=10Ω	50	200		I	50	200		I	V/mV

DC Electrical Characteristics (Note 1) $V_S = \pm 15V$, $T_A = 25°C$, $V_{CM} = 0V$ — Continued

	Parameter	Test Conditions	ELH0101A, AC				ELH0101, C				Units
			Min.	Typ.	Max.	Test Level	Min.	Typ.	Max.	Test Level	
V_O	Output Voltage Swing	$R_{SC} = 0\Omega$, $A_V = 1$, $R_L = 100\Omega$ (Note 3)	±11.7	±12.5		I	±11.7	±12.5		I	V
		$R_{SC} = 0\Omega$, $A_V = 1$, $R_L = 10\Omega$ (Note 3)	±11	±11.6		I	±11	±11.6		I	V
		$R_{SC} = 0\Omega$, $A_V = 1$, $R_L = 5\Omega$ (Note 3)	±10.5	±11		I	±10.5	±11		I	V
CMRR	Common-Mode Rejection Ratio	$V_{IN} = \pm 10V$	85	100		I	85	100		I	dB
PSRR	Power Supply Rejection Ratio	$\pm 5V \leq V_S \leq \pm 15V$	85	100		I	85	100		I	dB
		$+5V \leq V_S(+) \leq +15V$, $V_S(-) = -15V$	80	110		I	80	110		I	dB
		$-5V \geq V_S(-) \geq -15V$, $V_S(+) = +15V$	80	95		I	80	95		I	dB
I_S	Supply Current			28	35	I		28	35	I	mA

AC Electrical Characteristics $V_S = \pm 15V$, $T_A = T_C = T_J = 25°C$

	Parameter	Test Conditions	ELH0101A, AC				ELH0101, C				Units
			Min.	Typ.	Max.	Test Level	Min.	Typ.	Max.	Test Level	
e_n	Equivalent Input Noise Voltage	f = 1 kHz		25		V		25		V	$nV/\sqrt{Hz}$
C_{IN}	Input Capacitance	f = 1 MHz		3		V		3		V	pF
PBW	Power Bandwidth, −3 dB	$R_L = 10\Omega$, $A_V = 1$		300		V		300		V	kHz
S_R	Slew Rate	$R_L = 10\Omega$, $A_V = 1$	7.5	10		I		10		V	V/μs
t_r, t_f	Small Signal Rise or Fall Time	$R_L = 10\Omega$, $A_V = 1$		200		V		200		V	ns
	Small Signal Overshoot	$R_L = 10\Omega$, $A_V = 1$		10		V		10		V	%
GBW	Gain-Bandwidth Product	$R_L = \infty$, $A_V = 1$	4	5		I		5		V	MHz
t_S	Large Signal Settling Time (0.01%)	$R_L = \infty$, $A_V = 1$		2		V		2		V	μs
THD	Total Harmonic Distortion	f = 1 kHz, $P_O = 0.5W$, $R_L = 10\Omega$		0.008		V		0.008		V	%

Note 1: Specification is at $T_A = 25°C$. Actual values at operating temperature may differ from the $T_A = 25°C$ value. When supply voltages are ±15 V, quiescent operating junction temperature will rise approximately 20°C without heatsinking. Accordingly, V_{OS} may change 0.5 mV and I_B and I_{OS} will change significantly during warm-ups. Refer to I_B vs. temperature and power dissipation graphs for expected values.

Note 2: Change in offset voltage with dissipated power is due entirely to average device temperature rise and not to differential thermal feedback effects. Test is performed without any heatsink.

Note 3: At light loads, the output swing may be limited by the second stage rather than the output stage. See the application section under "Output swing enhancement" for hints on how to obtain extended operation. R_{SC} is the current sense resistor.

ELH0101/ELH0101A

Power Operational Amplifier

Typical Performance Curves

Power Dissipation

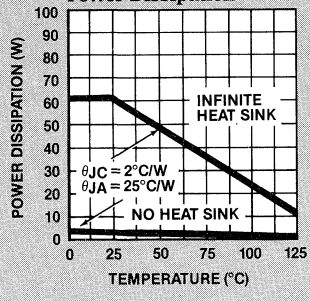

Safe Operating Area

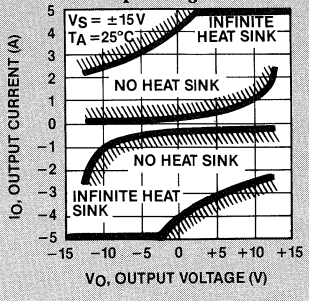

Quiescent Power Supply Current

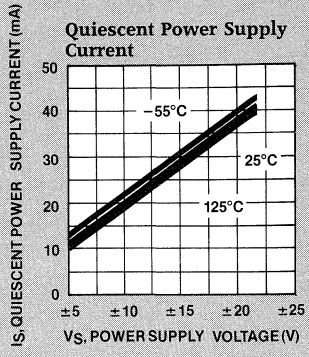

Input Bias Current

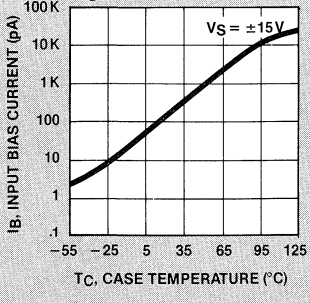

Input Bias Current After Warm-up

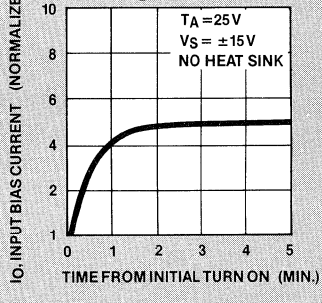

Input Common-Mode Voltage Range

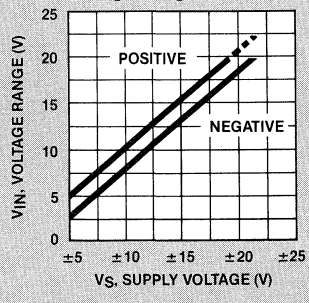

Open-Loop Small Signal Frequency Response

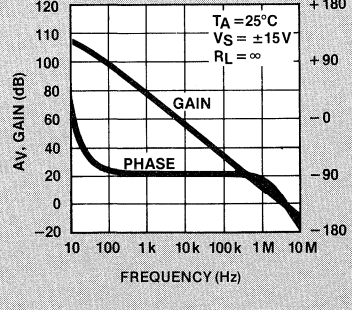

Output Voltage Swing vs Frequency

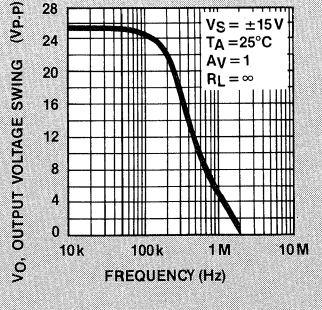

Common-Mode Rejection Ratio vs Frequency

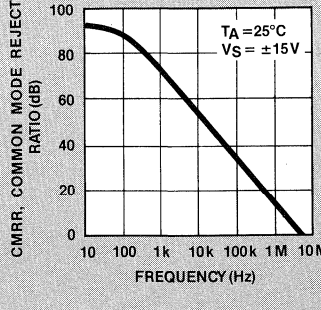

Typical Performance Curves—Continued

Power Supply Rejection Ratio vs Frequency

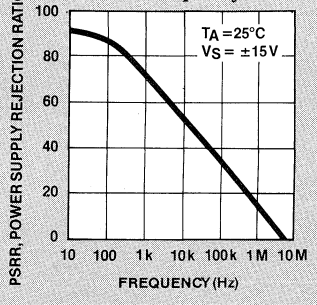

Settling Time

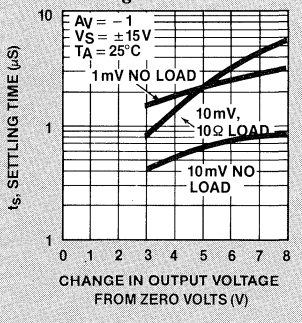

Total Harmonic Distortion vs Frequency

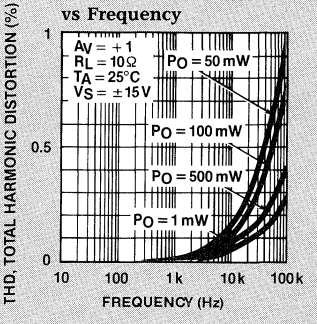

Total Harmonic Distortion vs Gain

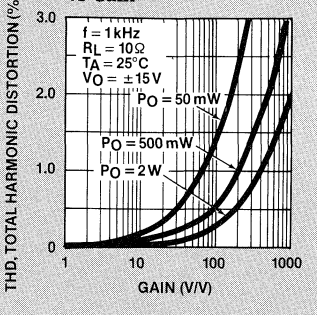

Equivalent Input Noise Voltage

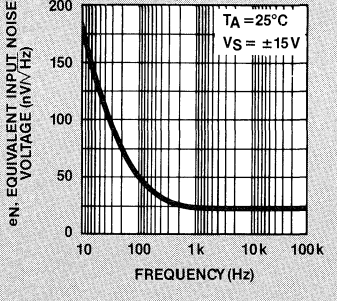

Output Voltage Swing with Swing Enhancement

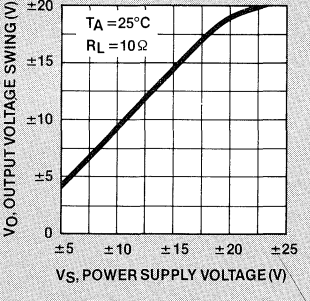

Output Voltage Swing vs Load Resistance

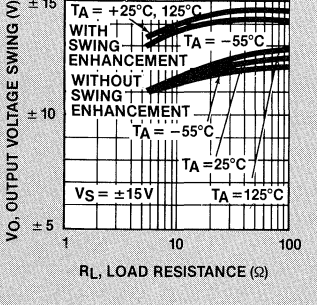

Open-Loop Output Resistance

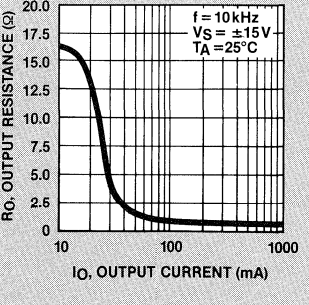

Open-Loop Output Resistance vs Frequency

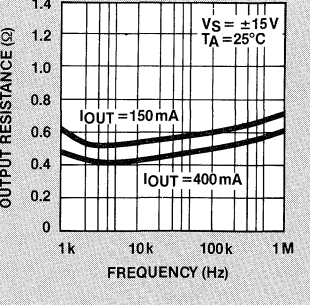

ELH0101/ELH0101A
Power Operational Amplifier

Typical Performance Curves—Continued

Short Circuit Current vs R_{SC}

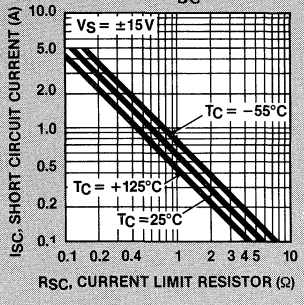

Small Signal Pulse Response

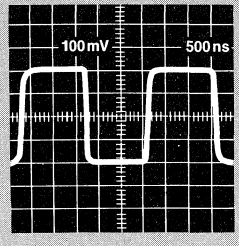

Large Signal Pulse Response

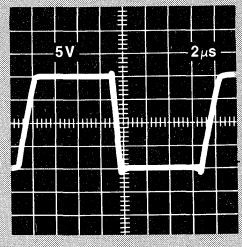

Typical Applications

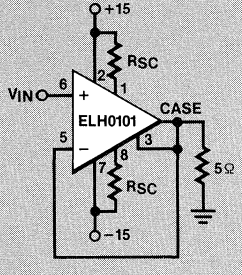

High Power Voltage Follower

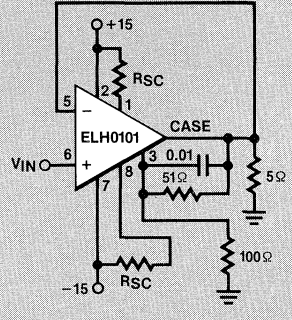

High Power Voltage Follower with Swing Enhancement

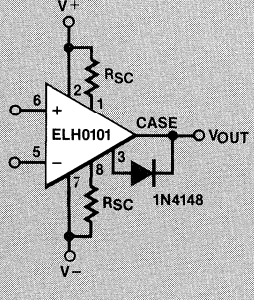

Restricting Outputs to Positive Voltage Only

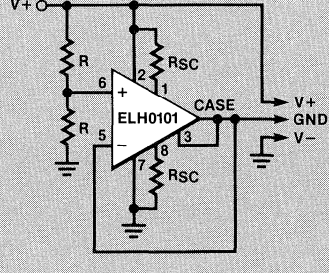

Generating a Split Supply from a Single Voltage Supply

Typical Applications—Continued

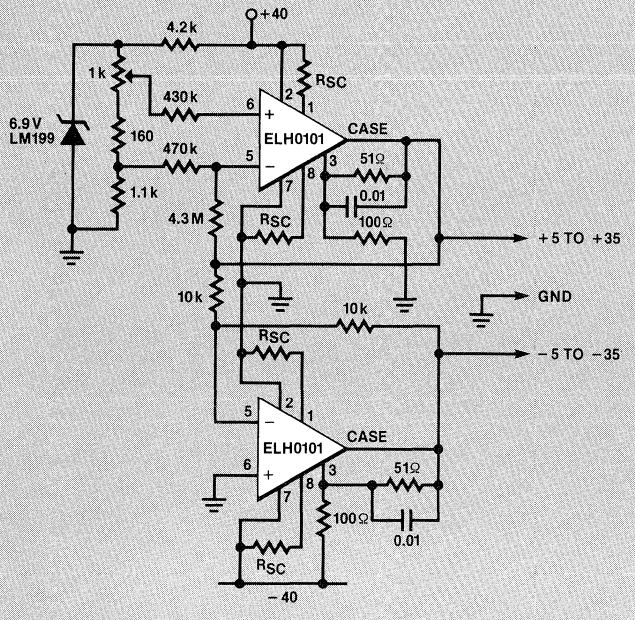

±5 to ±35 Power Source or Sink

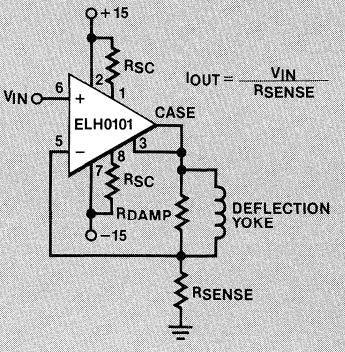

CRT Deflection Yoke Driver

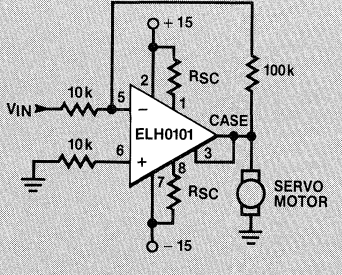

DC Servo Amplifier

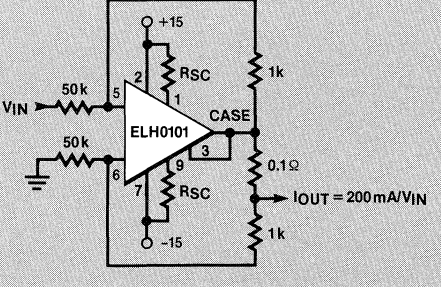

High Current Source/Sink

ELH0101/ELH0101A
Power Operational Amplifier

Applications Information

Input Voltages

The ELH0101 operational amplifier contains JFET input devices which exhibit high reverse breakdown voltages from gate to source or drain. This eliminates the need for input clamp diodes, so that high differential input voltages may be applied without a large increase in input current. However, neither input voltage should be allowed to exceed the negative supply as the resultant high current flow may destroy the unit.

Exceeding the negative common-mode limit on either input will cause a reversal of the phase to the output and force the amplifier output to the corresponding high or low state. Exceeding the negative common-mode limit on both inputs will force the amplifier output to a high state. In neither case does a latch occur since raising the input back within the common-mode range again puts the input stage and thus the amplifier in a normal operating mode.

Exceeding the positive common-mode limit on a single input will not change the phase of the output however, if both inputs exceed the limit, the output of the amplifier will be forced to a high state.

These amplifiers will operate with the common-mode input voltage equal to the positive supply. In fact, the common-mode voltage may exceed the positive supply by approximately 100 mV, independent of supply voltage and over the full operating temperature range. The positive supply may therefore be used as a reference on an input as, for example, in a supply current monitor and/or limiter.

With the ELH0101 there is a temptation to remove the bias current compensation resistor normally used on the non-inverting input of a summing amplifier. Direct connection of the inputs to ground or a low-impedance voltage source is not recommended with supply voltages greater than 3 V. The potential problem involves loss of one supply which can cause excessive current in the second supply. Destruction of the IC could result if the current to the inputs of the device is not limited to less than 100 mA or if there is much more than 1 μF bypass on the supply bus.

Although difficulties can be largely avoided by installing clamp diodes across the supply lines on every PC board, a conservative design would include enough resistance in the input lead to limit current to 10 mA if the input lead is pulled to either supply by internal currents. This precaution is by no means limited to the ELH0101.

Layout Considerations

When working with circuitry capable of resolving picoampere level signals, leakage currents in circuitry external to the op amp can significantly degrade performance. High quality insulation is a must (Kel-F and Teflon rate high). Proper cleaning of all insulating surfaces to remove fluxes and other residues is also required. This includes the IC package as well as sockets and printed circuit boards. When operating in high humidity environments or near 0°C, some form of surface coating may be necessary to provide a moisture barrier.

The effects of board leakage can be minimized by encircling the input circuitry with a conductive guard ring operated at a potential close to that of the inputs.

Electrostatic shielding of high impedance circuitry is advisable.

Error voltages can also be generated in the external circuitry. Thermocouples formed between dissimilar metals can cause hundreds of microvolts of error in the presence of temperature gradients.

Since the ELH0101 can deliver large output currents, careful attention should be paid to power supply, power supply bypassing and load currents. Incorrect grounding of signal inputs and load can cause significant errors.

Every attempt should be made to achieve a single point ground system as shown in the figure below.

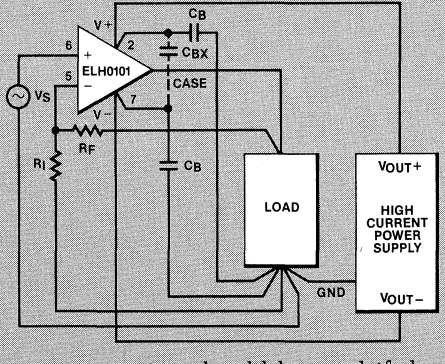

Bypass capacitor C_{BX} should be used if the lead lengths of bypass capacitors C_B are long. If a single point ground system is not possible, keep signal, load, and power supply from intermingling as much as possible. For further information on proper groun-

Applications Information—Continued

ding techniques refer to "Grounding and Shielding Techniques in Instrumentation" by Morrison, and "Noise Reduction Techniques in Electronic Systems" by Ott (both published by John Wiley and Sons).

Leads or PC board traces to the supply pins, short circuit current limit pins, and the output pin must be substantial enough to handle the high currents that the ELH0101 is capable of producing.

Short Circuit Current Limiting

Should current limiting of the output not be necessary, SC+ should be shorted to V+ and SC− should be shorted to V−. Remember that the short circuit current limit is dependent upon the total resistance seen between the supply and current limit pins. This total resistance includes the desired resistor plus leads, PC Board traces, and solder joints.* Assuming a zero TCR current limit resistor, typical temperature coefficient of the short circuit will be approximately 0.3%.

Thermal Resistance

The thermal resistance between two points of a conductive system is expressed as:

$$\theta_{12} = \frac{T_1 - T_2}{P_D} \text{ °C/W}$$

where subscript order indicates the direction of heat flow. A simplified heat transfer circuit for a cased semiconductor and heatsink system is shown in the figure below.

The circuit is valid only if the system is in thermal equilibrium (constant heat flow) and there are, indeed, single specific temperatures, T_J, T_C, and T_S, (no temperature distribution in junction, case, or heatsink). Nevertheless, this is a reasonable approximation of actual performance.

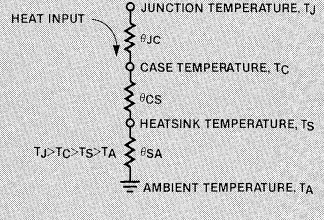

*Short circuit current will be limited to approximately $\frac{0.6}{R_{SC}}$

The junction-to-case thermal resistance, θ_{JC}, specified in the data sheet depends upon the material and size of the package, die size and thickness, and quality of the die bond to the case or lead frame. The case-to-heatsink thermal resistance, θ_{CS}, depends on the mounting of the device to the heatsink and upon the area and quality of the contact surface. Typical θ_{CS} for a TO-3 package is 0.5 to 0.7°C/W, and 0.3 to 0.5°C/W using silicone grease.

The heatsink to ambient thermal resistance, θ_{SA}, depends on the quality of the heatsink and the ambient conditions.

Cooling is normally required to maintain the worst case operating junction temperature, T_J, of the device below the specified maximum value, $T_{J(MAX)}$. T_J can be calculated from known operating conditions. Rewriting the above equation, we find:

$$\theta_{JA} = \frac{T_J - T_A}{P_D} \text{ °C/W}$$

$$T_J = T_A + P_D\theta_{JA} \text{°C}$$

Where: $P_D = (V_S - V_{OUT})I_{OUT} + |V+ - (V-)|I_Q$

$\theta_{JA} = \theta_{JC} + \theta_{CS} + \theta_{SA}$ and V_S = Supply Voltage

θ_{JC} for the ELH0101 is typically 2°C/W.

Stability and Compensation

As with most amplifiers, care should be taken with lead dress, component placement and supply decoupling in order to ensure stability. For example, resistors from the output to an input should be placed with the body close to the input to minimize "pickup" and maximize the frequency of the feedback pole by minimizing the capacitance from the input to ground.

A feedback pole is created when the feedback around any amplifier is resistive. The parallel resistance and capacitance from the input of the device (usually the inverting input) to AC ground set the frequency of the pole. In many instances the frequency of this pole is much greater than the expected 3 dB frequency of the closed loop gain and consequently there is negligible effect on stability margin. However, if the feedback pole is less than approximately six times the ex-

ELH0101/ELH0101A
Power Operational Amplifier

Application Information — (Continued)

pected 3 dB frequency, a lead capacitor should be placed from the output to the input of the op amp. The value of the added capacitor should be such that the RC time constant of this capacitor and the resistance it parallels is greater than or equal to the original feedback pole time constant.

Some inductive loads may cause output stage oscillation. A 0.01 μF ceramic capacitor in series with a 10 Ω resistor from the output to ground will usually remedy this situation.

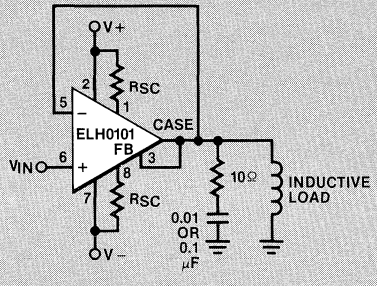

Capacitive loads may be compensated for by traditional techniques. (See "Operational Amplifiers: Theory and Practice" by Roberge, published by Wiley).

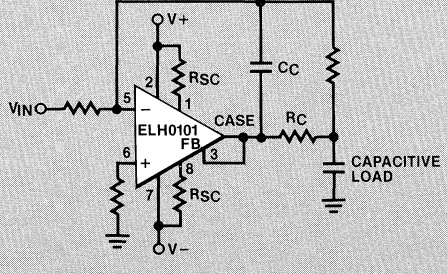

A similar but alternative technique may be used for the ELH0101.

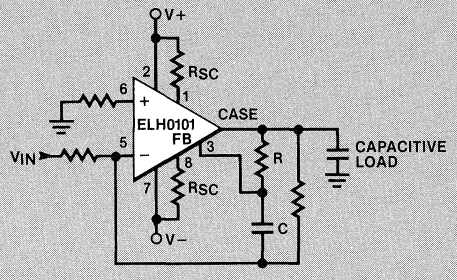

Output Swing Enhancement

When the feedback pin is connected directly to the output, the output voltage swing is limited by the driver stage and not by output saturation. Output swing can be increased by taking gain in the output stage as shown below in the High Power Voltage Follower with Swing Enhancement. Whenever gain is taken in the output stage, either the output stage, or the entire op amp must be appropriately compensated to account for the additional loop gain.

Output Resistance

The open-loop output resistance of the ELH0101 is a function of the load current. No-load output resistance is approximately 10 Ω. This decreases to under an ohm for load currents exceeding 100 mA.

Burn-In Circuit

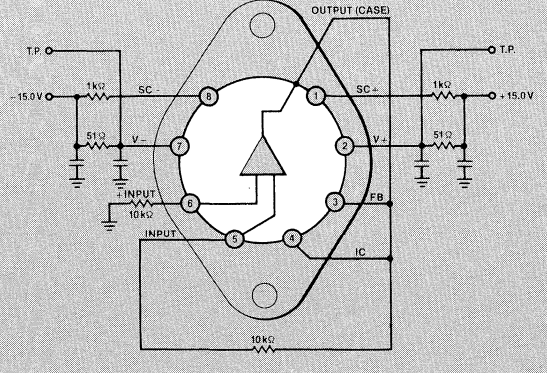

élantec
HIGH PERFORMANCE ANALOG INTEGRATED CIRCUITS

EL2006/EL2006A

High Gain Fast FET Input Op Amp

Features

- 90dB open loop gain
- 450V/μs slew rate
- 40MHz bandwidth
- No thermal tail
- 3mV max. input offset voltage
- Offset nulls with single pot
- No compensation required for gains above 50
- Peak output current to 200mA
- Pin compatible with LH0032
- 80dB common mode rejection

Ordering Information

Part No.	Temp. Range	Pkg.	Outline#
EL2006CG	-25 to +85°C	TO-8	MDP0002
EL2006CG/E+	-25 to +85°C	TO-8	MDP0002
EL2006G	-55 to +125°C	TO-8	MDP0002
EL2006G/883	-55 to +125°C	TO-8	MDP0002
EL2006ACG	-25 to +85°C	TO-8	MDP0002
EL2006ACG/E+	-25 to +85°C	TO-8	MDP0002
EL2006AG	-55 to +125°C	TO-8	MDP0002
EL2006AG/883	-55 to +125°C	TO-8	MDP0002
EL2006L	-55 to +125°C	54-Pin LCC	MDP0013
EL2006AL	-55 to +125°C	54-Pin LCC	MDP0013
EL2006L/883	-55 to +125°C	54-Pin LCC	MDP0013
EL2006AL/883	-55 to +125°C	54-Pin LCC	MDP0013

Connection Diagrams

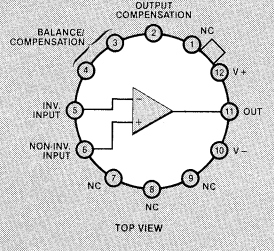

TOP VIEW

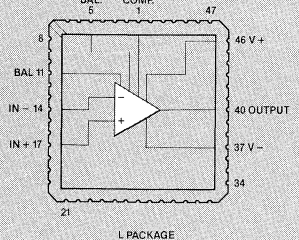

L PACKAGE (TOP VIEW)

General Description

The EL2006/EL2006A are high slew rate, wide bandwidth, high input impedance, high gain and fully differential input operational amplifiers. They exhibit excellent open loop gain characteristics making them suitable for a broad range of high speed signal processing applications. The devices have open loop gains in excess of 86dB making the EL2006/EL2006A ideal choices for current mode video bandwidth digital to analog converters of 10 bits or higher resolution. The EL2006's FET input structure, high slew rate, and high output drive capability allow use in applications such as buffers for flash converter inputs. In general the EL2006/EL2006A allow the user to take relatively high closed loop gains without compromising gain accuracy or bandwidth.

The EL2006/EL2006A are pin compatible with the popular industry standard ELH0032/ELH0032A offering comparable bandwidth and slew rate, while offering significant improvements in open loop gain, common mode rejection and power supply rejection. The EL2006/EL2006A is guaranteed over the temperature range -55°C to +125°C, and the EL2006C/EL2006AC is guaranteed from -25°C to +85°C.

Elantec facilities comply with MIL-I-45208A and are MIL-STD-1772 certified. Elantec's Military devices comply with MIL-STD-883 Class B Revision C and are manufactured in our rigidly controlled, ultra-clean facilities in Milpitas, California. For additional information on Elantec's Quality and Reliability Assurance Policy and procedures request brochure QRA-1.

Simplified Schematic

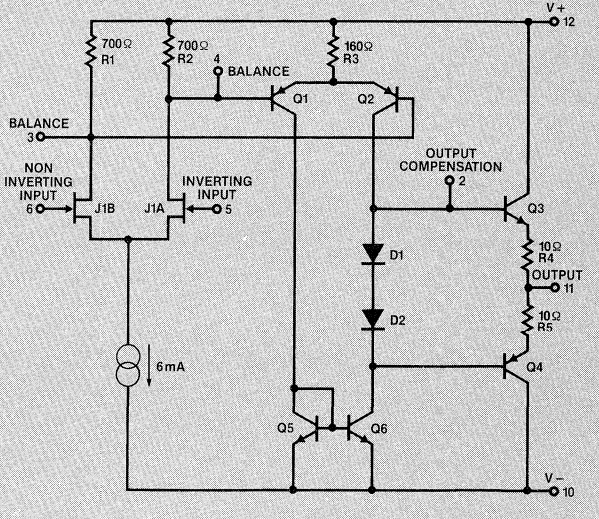

EL2006/EL2006A

High Gain Fast FET Input Op Amp

Absolute Maximum Ratings (25°C)

V_S	Supply Voltage	±18V	T_A	Operating Temperature Range:	
V_{IN}	Input Voltage	±15V		EL2006, EL2006A	−55°C to +125°C
	Differential Input Voltage	30V		EL2006C, EL2006AC	−25°C to +85°C
I_{OUT}	Peak Output Current (Note 1)	±200mA	T_J	Operating Junction Temperature	175°C
P_D	Power Dissipation		T_{ST}	Storage Temperature	−65°C to +150°C
	T_A=25°C 1.5W, derate 100°C/W to 125°C			Lead Temperature	
	T_C=25°C 2.2W, derate 70°C/W to 125°C			(soldering, 5 seconds)	300°C

Important Note: **All parameters having Min./Max. specifications are guaranteed. The Test Level column indicates the specific device testing actually performed during production and Quality Assurance inspection. Elantec performs most electrical tests using modern high-speed automatic test equipment, specifically the LTX 77 Series system. Unless otherwise noted, all tests are pulsed tests, therefore $T_J=T_C=T_A$.**

Test Level **Test Procedure**

I 100% production tested and QA sample tested per QA test plan QCX0002.

II 100% production tested at T_A=25°C, and QA sample tested at T_A=25°C, T_{MAX} and T_{MIN} per QA test plan QCX0002.

III QA sample tested per QA test plan QCX0002.

IV Parameter is guaranteed (but not tested) by Design and Characterization Data.

V Parameter is typical value for information purposes only.

DC Electrical Characteristics V_S= ±15V, $T_{MIN}<T_A<T_{MAX}$

			EL2006				EL2006C				
	Parameter	Test Conditions	Min.	Typ.	Max.	Test Level	Min.	Typ.	Max.	Test Level	Units
V_{OS}	Offset Voltage	T_J=25°C			5	I			5	I	mV
					10	I			10	III	mV
$\Delta V_{OS}/\Delta T$	Offset Voltage Drift			15		V		15		V	µV/°C
I_B	Bias Current	T_J=25°C			100	I			500	I	pA
				1	10	I		1	10	III	nA
I_{OS}	Offset Current	T_J=25°C			25	I			50	I	pA
				0.2	2.5	I		0.2	2.5	III	nA
V_{CM}	Common Mode Range		±10			I	±10			II	V
CMRR	Common Mode Rejection Ratio	ΔV_{IN}= ±10V	70	80		I	70	80		II	dB
PSRR	Power Supply Rejection Ratio	±5V≤V_S≤±15V	70	88		I	70	88		II	dB
A_{VOL}	Large Signal Voltage Gain	R_L=1kΩ, V_{OUT}= ±10V, T_J=25°C	86	90		I	80	90		I	dB
		R_L=1kΩ, V_{OUT}= ±10V	80			I	74			III	dB
V_O	Output Voltage Swing	R_L=1kΩ	±12			I	±12			II	V
I_{OUT}	Output Current	V_{OUT}= ±10V, T_J=25°C, Note 1	±100			I	±100			I	mA
I_{CC}	Supply Current			20	23	I		20	23	II	mA

DC Electrical Characteristics $V_S = \pm 15V$, $T_{MIN} < T_A < T_{MAX}$ (Note: These tests are in addition to those listed above.)

	Parameter	Test Conditions	EL2006A				EL2006AC				Units
			Min.	Typ.	Max.	Test Level	Min.	Typ.	Max.	Test Level	
V_{OS}	Offset Voltage	$T_J = 25°C$			3	I			3	I	mV
$\Delta V_{OS}/\Delta T$	Offset Voltage Drift			15	25	I		15	25	I	$\mu V/°C$
A_{VOL}	Large Signal Voltage Gain	$T_J = 25°C$, $R_L = 1k\Omega$, $V_{OUT} = \pm 10V$	86	90		I	86	90		II	dB
		$R_L = 1k\Omega$, $V_{OUT} = \pm 10V$	80			I	80			III	dB

AC Electrical Characteristics $V_S = \pm 15V$, $R_L = 1k\Omega$, $T_J = 25°C$ (See AC test circuits)

	Parameter	Test Conditions	EL2006, EL2006A				EL2006C, EL2006AC				Units
			Min.	Typ.	Max.	Test Level	Min.	Typ.	Max.	Test Level	
t_r	Rise Time	$A_V = 10$, $V_{OUT} = 1V_{P-P}$		18		V		18		V	ns
		$A_V = 1$, $V_{OUT} = 1V_{P-P}$		12	15	I		12	15	I	ns
SR	Slew Rate (Note 2)	$A_V = 1$, $V_{OUT} = 20V_{P-P}$	350	450		I	350	450		I	$V/\mu s$
t_s	Settling Time to 1.0%	$A_V = -1$, $V_{OUT} = 10V_{P-P}$		90		V		90		V	ns
t_s	Settling Time to 0.1%	$A_V = -1$, $V_{OUT} = 10V_{P-P}$		160		V		160		V	ns
t_s	Settling Time to 0.01%	$A_V = -1$, $V_{OUT} = 10V_{P-P}$		250		V		250		V	ns
GBW	Gain Bandwidth Product	$A_V \geq 20$		500		V		500		V	MHz
	Full Power Bandwidth (Note 3)	$V_{OUT} = \pm 10V$	5.5	7		I	5.5	7		I	MHz
	Unity Gain Bandwidth	$C_A = 8pF$, $C_B = 100pF$		40		V		40		V	MHz
e_N	Noise Voltage	1kHz to 1MHz		20		V		20		V	$nV/\sqrt{Hz}$
t_D	Small Signal Delay	$A_V = 1$		13	15	I		13	15	I	ns
C_{in}	Input Capacitance			2		V		2		V	pF

Note 1: $T_J = 25°C$, duty cycle <1%, pulse width <10μs.

Note 2: Slew rate is measured at the 25% and 75% points.

Note 3: The Full Power bandwidth is guaranteed by testing slew rate.

EL2006 Recommended Compensation

(See figure 1)

A_{VOL}	C_A	C_B	R_S+	R_S-	R_F
+1	5–8pF	100pF	2K	Open Circuit	100
−1 to +5	5pF	68pF	0	<1K	1K
±10	5pF	10pF	<1K	1K	>10K
>±20	3pF	10pF	<1K	1K	>20K

Note: Use a small capacitor of about 3pF in parallel with R_F to compensate for stray input capacitance.

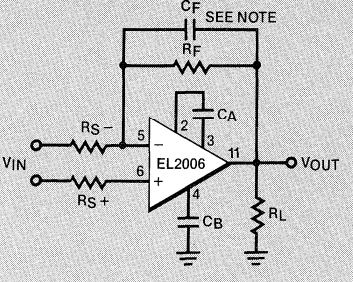

Figure 1

EL2006/EL2006A

High Gain Fast FET Input Op Amp

Typical Performance Curves

Bode Plot, Unity Gain Compensation

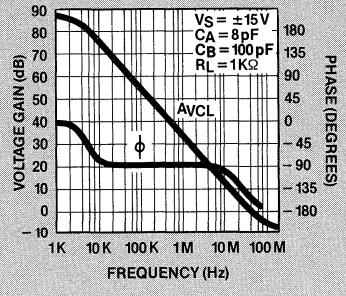

Supply Current vs. Temperature

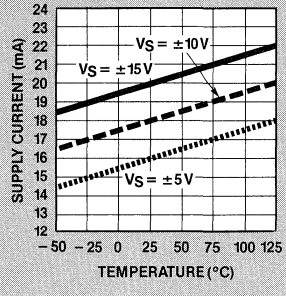

Inverting Gain of −1 Settling Time

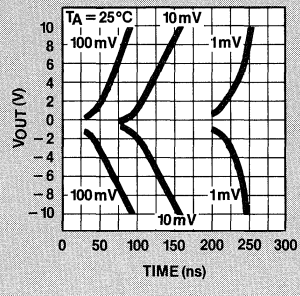

Input Bias Currents as a Function of Input Voltage

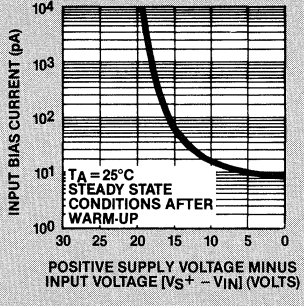

Maximum Power Dissipation

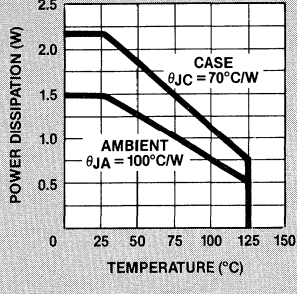

Normalized Input Bias and Offset Current vs. Junction Temperature

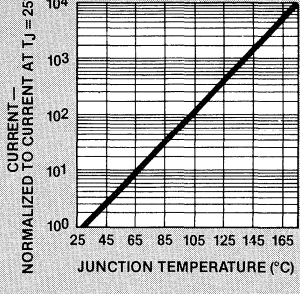

Applications Information

General

The EL2006 was designed to overcome the gain and stability limitations of prior high speed FET input operational amplifiers like the LH0032. Open loop gain is typically 90 dB allowing gain setting to 12 bit accuracy. This new design also eliminates "thermal tail", which is the tendency for the gain to diminish at very low frequencies to DC due to thermal feedback. The EL2006 is also easier to stabilize than earlier designs, thanks to an Elantec proprietary internal compensation technique which eliminates the "second stage bump". The EL2006 open loop gain characteristic is well behaved well beyond the unity gain frequency so that spurious ringing or oscillation in the 100-200 MHz region is avoided. Finally, we have provided temperature compensation so that gain and stability are relatively constant over temperature.

These improvements are provided in a configuration which is plug compatible with LH0032 and similar products so that designers can easily upgrade their system performance without extensive re-design. In most cases, the EL2006 can be used to replace LH0032 with no change in external compensation.

Video DAC Amplifiers
A typical application for the EL2006 is to provide gain for video signals. In the example shown, the EL2006 provides a gain of 2 with settling time around 35 ns to 10 mV.

Power Supply Decoupling
The EL2006/EL2006A, like most high-speed circuits, is sensitive to layout and stray capacitance. Power supplies should be bypassed as near to pins 10 and 12 as possible with low inductance capacitors such as 0.01μF disc ceramics. Compensation components should also be located close to the appropriate pins to minimize stray reactances.

Input Current
Because the input devices are FETs, the input bias current may be expected to double for each 11°C junction temperature rise. This characteristic is plotted in the typical performance characteristics graphs. The device will self-heat due to internal power dissipation after application of power, thus raising the FET junction temperature 40-60°C above the free-air ambient temperature when supplies are ±15 V. The device temperature will stabilize within 5-10 minutes after application of power, and the input bias currents measured at the time will be indicative of normal operating currents. An additional rise will occur as power is delivered to a load due to additional internal power dissipation.

Power Dissipation
There is an additional effect on input bias current as the input voltage is changed. The effect, common to all FETs, is an avalanche-like increase in gate current as the FET gate-to-drain voltage is increased above a critical value, depending on FET geometry and doping levels. This effect will be noted as the input voltage of the EL2006 is taken below ground potential when the supplies are ±15 V. All of the effects described here may be minimized by operating the device with $V_S \leq \pm 15$ V.
These effects are indicated in the typical performance curves.

Input Capacitance
The input capacitance to the EL2006/EL2006A is typically 2 pF and thus may form a significant time constant with high value resistors. For optimum performance, the input capacitance to the inverting input should be compensated by a small capacitor across the feedback resistor. The value is strongly dependent on layout and closed loop gain, but will typically be in the neighborhood of several picofarads.
In the non-inverting configuration, it may be advantageous to bootstrap the case and/or a guard conductor to the inverting input. This serves both to divert leakage currents away from the non-inverting input and to reduce the effective input capacitance. A unity gain follower so treated will have an input capacitance under a 1 pF.

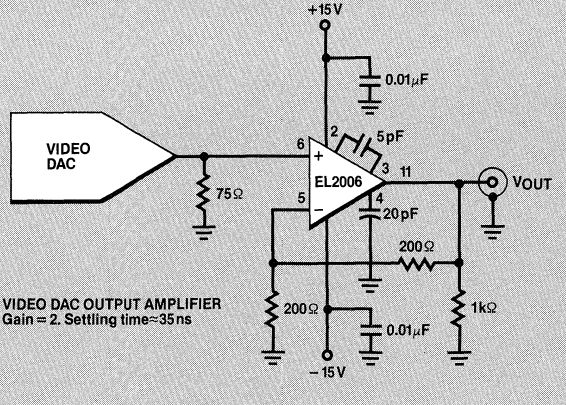

VIDEO DAC OUTPUT AMPLIFIER
Gain = 2. Settling time≈35 ns

Heatsinking

While the EL2006/EL2006A is specified for operation without any explicit heatsink, internal power dissipation does cause a significant temperature rise. Improved bias current performance can thus be obtained by limiting this temperature rise with a small heat sink such as the Thermalloy No. 2241 or equivalent. The case of the device has no internal connection, so it may be electrically connected to the sink if this is advantageous. Be aware, however, that this will affect the stray capacitances to all pins and may thus require adjustment of circuit compensation values.

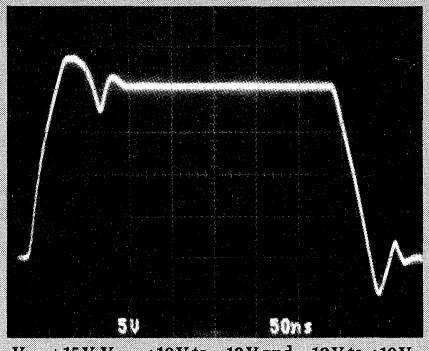

$V_S = \pm 15\,V$, $V_{IN} = +10\,V$ to $-10\,V$ and $-10\,V$ to $+10\,V$

Voltage Follower (Av = +1)
Large Signal Pulse Response

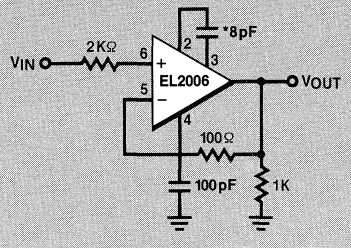

*INCLUDES STRAYS

Large Signal Pulse Response
Test Circuit

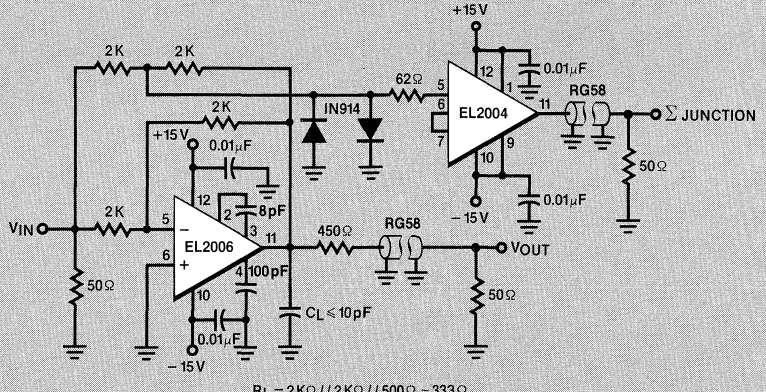

$R_L = 2K\Omega\,//\,2K\Omega\,//\,500\Omega \approx 333\Omega$

EL2006 Settling Time Test Circuit

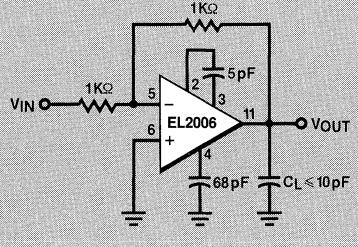

Inverting Unity Gain

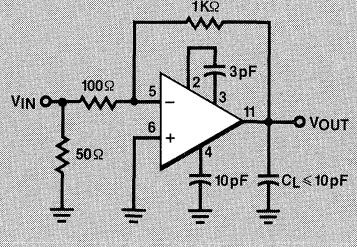

Inverting Gain of 10

Burn-In Circuit

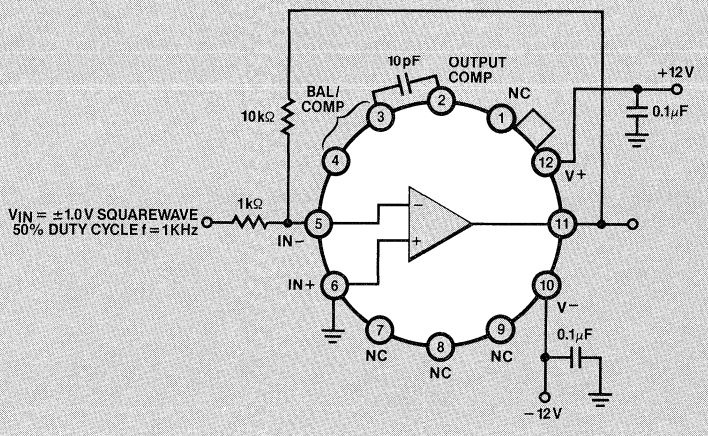

EL2020/EL2020C

30 MHz Current Feedback Amplifier

Features

- Slew rate >500 V/μs
- Internal compensation for all gains
- 30 MHz bandwidth for any gain setting
- Drives ±2.4 Volts into 75 Ω
- Low Differential phase and gain errors
- Vsupply ±5 Volts to ±15 Volts
- Output short circuit protected
- Uses current mode feedback
- 1% settling time less than 100 ns for 10 V step
- ±30 mA output current
- 10 mA supply current
- 8 pin mini-dip

Applications

- Video gain block
- Residue amplifier
- Radar systems
- Current to voltage converter
- Coax cable driver with gain of 2

General Description

The EL2020 is a fast settling, wide bandwidth amplifier optimized for gains of between −10 and +10. Built using the Elantec monolithic Dielectric Isolation process, this amplifier uses current mode feedback to achieve more bandwidth at a given gain then a conventional voltage feedback operational amplifier.

The EL2020 will drive two double terminated 75Ω coax cables to video levels with low distortion. Since it is a closed loop device, the EL2020 provides better gain accuracy and lower distortion than an open loop buffer. The device includes output short circuit protection, and input offset adjust capability.

The bandwidth and slew rate of the EL2020 are relatively independent of the closed loop gain taken. The 30 MHz bandwidth at unity gain only changes by 10% with a gain of 10. The EL2020 may be used in most applications where a conventional op-amp is used, with a big improvement in speed power product.

The EL2020 will be available in both 8 pin Plastic DIP and 8 pin Cerdip.

Elantec facilities comply with MIL-I-45208A and other applicable quality specifications. For information on Elantec's military processing, see the section: *Elantec's Military Processing—Monolithic Products.*

Ordering Information

Part No.	Temp. Range	Pkg.	Outline#
EL2020CN	−25 to +85°C	P-DIP	MDP0006
EL2020CN/E+	−25 to +85°C	P-DIP	MDP0006
EL2020CJ	−25 to +85°C	Cerdip	MDP0010
EL2020CJ/E+	−25 to +85°C	Cerdip	MDP0010
EL2020J	−55 to +125°C	Cerdip	MDP0010
EL2020J-8	−55 to +125°C	Cerdip	MDP0010

Connection Diagram

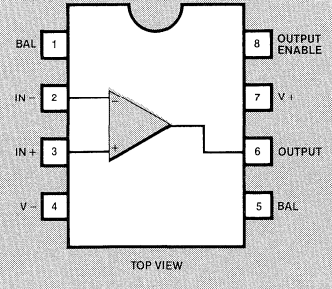

TOP VIEW

Simplified Schematic

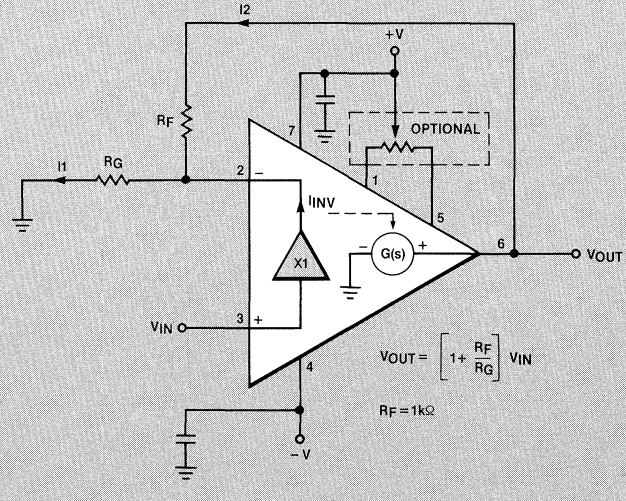

élantec
HIGH PERFORMANCE ANALOG INTEGRATED CIRCUITS

EL231/EL231C
165 MHz Current Feedback Amplifier

Features
- 165 MHz closed loop—3 dB bandwidth
- Slew rate of ±3000 V/μs
- Internal compensation for all gains
- ±100 mA output current
- Uses current mode feedback
- 0.1% settling time is 22 ns for 2.5 V volt step
- Small size hybrid TO–8 package
- V_{supply} ±5 Volts to ±15 Volts
- 22 mA supply current

Applications
- Video gain block
- A/D converters
- Residue amplifier
- Radar systems
- DAC current to voltage converter
- Coax cable driver with gain of 2

Ordering Information

Part No.	Temp. Range	Pkg.	Outline#
EL231CG	−25 to +85°C	TO-8	MDP0002
EL231G	−55 to +125°C	TO-8	MDP0002
EL231G/883	−55 to +125°C	TO-8	MDP0002

Connection Diagram

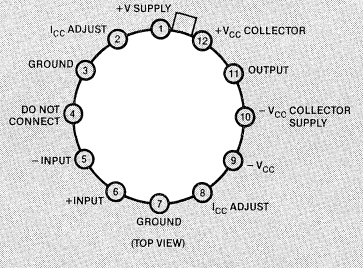

General Description
The EL231 Amplifier is designed to drive low impedance loads with ultra high frequency signals. Using current mode feedback, the EL231 is a fast settling, wide bandwidth amplifier optimized for gains of between −10 and +10. The bandwidth and slew rate of the EL231 are relatively independent of the closed loop gain taken, due to the current mode feedback.

The EL231 will drive five double terminated 75Ω coax cables to video levels with low distortion. Since it is a closed loop device, the EL231 provides better gain accuracy than is possible with open loop buffers. The EL231 may be used in most applications where a conventional op-amp is used, with a big improvement in speed power product.

The EL231 will be available in a 12 pin TO-8 package.

Elantec facilities comply with MIL-I-45208 and other applicable quality specifications. For information on Elantec's military processing, see the section: *Elantec's Military Processing—Hybrid Products.*

Block Diagram

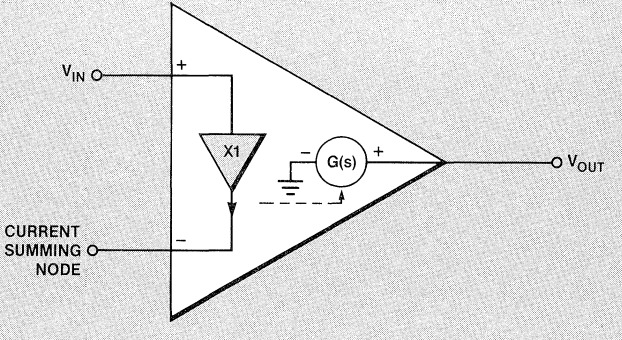



TM

Servo Amplifiers

élantec

HIGH PERFORMANCE ANALOG INTEGRATED CIRCUITS

ELANTEC Part Number	Description	Continuous Output Current Drive	Voltage Swing Across Load	Power Supply Voltage Range	Operating Mode	Packages
EL2007	Hybrid—Voltage to Current Amp. "H" Bridge Output Single 4.5 to 20 V Supply	2 A Min.	±10 V Min. (+12 V Supply)	+4.5 to +20 V	Linear or Switchmode	24 Pin DIP
EL2017	Monolithic—Voltage to Current Controller for EL2007 or similar "H" Bridge	45 mA (Drive for External Transistors)	±10 V Min. (+12 V Supply)	+4.5 to +20 V	Linear or Switchmode	20 Pin P-DIP 20 Pin Cerdip
ELH0021	Hybrid Power Operational Amplifier	1.1 A Min.	±13.5 V Min. (+15 V Supply)	±5 to ±18 V	Linear	8 Pin TO–3
ELH0041	Hybrid Power Operational Amplifier	200 mA Typ.	±13 V Min. (+15 V Supply)	±5 to ±18 V	Linear	12 Pin TO–8
ELH0101	Hybrid Power Operational Amplifier	2.1 A Min.	±11.7 V Min. (+15 V Supply)	±5 to ±22 V	Linear	8 Pin TO–3

élantec
HIGH PERFORMANCE ANALOG INTEGRATED CIRCUITS

EL2007
High Efficiency Precision Servo Driver

Features
- Logic Selection of Class B or D Mode
- Efficient Class D Switching Mode
- Linear Class B Track Mode
- Single Supply Operation 4.5 to 20V
- No External Active Components Required

Applications
- Winchester Disc Head Positioning Servo
- 3.5" Disc Drive Servo
- Galvo Motors
- Robotics
- DC Motor Controls

Ordering Information

Part No.	Temp. Range	Pkg.	Outline#
EL2007-2CD	−25 to +85°C	24-Pin DIP	MDP0005
EL2007-2CD/E+	−25 to +85°C	24-Pin DIP	MDP0005

Connection Diagram

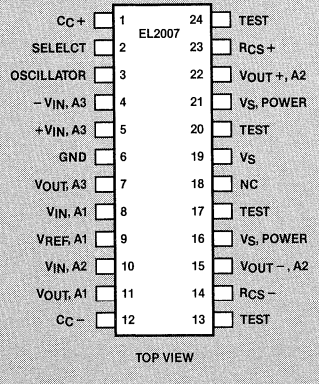

TOP VIEW

General Description

The EL2007 is designed to reduce the power consumption and space required for closed-loop control of voice coil actuator motors in disc head positioning servos and other precision servos. It includes the current sense amplifier, bridge output power drive and the error amplifier.

The EL2007 can save power by using a Class D (chopper) mode output drive during the high current "seek" operation. Device dissipation is reduced a factor of three providing higher reliability and easier heat management. During the lower current "tracking" operation, the amplifier switches to conventional Class B analog mode for noise-free data retrieval. A logic input selects the operating mode. The bridge output stage of the 2007 is designed for minimum saturation voltage allowing efficient operation with single supply voltage from 4.5 to 20V.

A low offset differential amplifier senses the output current in the bridge ground return and provides a proportional voltage added to the externally-generated common-mode reference voltage.

The EL2007 contains all of the control circuitry, the output power transistors and the catch diodes required to drive over 2 Amps in the Class D mode, or 0.75 Amps in the Class B mode. For more current, use the EL2017 with external power transistors.

The EL2007 is available in a 24-lead dual-in-line package.

Block Diagram

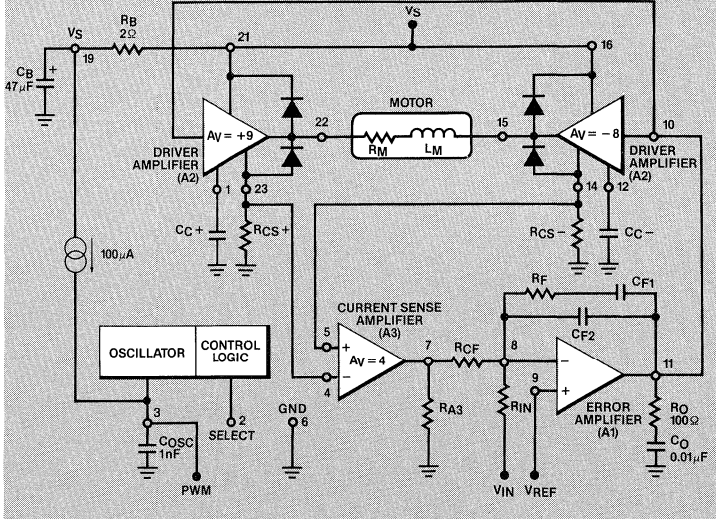

Absolute Maximum Ratings (25°C)

V_S	Supply Voltage	20 V	T_J	Junction Temperature—EL2007	175°C
V_{IN}	Input Voltage Range (any logic pin)	−0.3 V to V_S	T_A	Operating Temperature Range	−25°C to +85°C
	Sense Amp Input Voltage Range	−1.5 V to V_S		Lead Temperature (soldering, 5 seconds)	245°C
	Sense Amp Differential Input Voltage Range	±5 V	T_{ST}	Storage Temperature	−65°C to +150°C
I_{OUT}	Output Current	±2.5 A	P_D	Power Dissipation—EL2007 (see curves)	10 W

Important Note: All parameters having Min./Max. specifications are guaranteed. The Test Level column indicates the specific device testing actually performed during production and Quality Assurance inspection. Elantec performs most electrical tests using modern high-speed automatic test equipment, specifically the LTX 77 Series system. Unless otherwise noted, all tests are pulsed tests, therefore $T_J = T_C = T_A$.

Test Level — Test Procedure

I — 100% production tested and QA sample tested per QA test plan QCX0002.

II — 100% production tested at $T_A = 25°C$, and QA sample tested at $T_A = 25°C$, T_{MAX} and T_{MIN} per QA test plan QCX0002.

III — QA sample tested per QA test plan QCX0002.

IV — Parameter is guaranteed (but not tested) by Design and Characterization Data.

V — Parameter is typical value for information purposes only.

Electrical Characteristics $T_J = T_A = 25°C$, $R_L = 10\Omega$ (see test figure) (Note 7)

	Parameter	Mode	Volts V_S	Volts V_{REF}	Volts V_{IN}	Min.	Typ.	Max.	Test Level	Units
SYSTEM, CLOSED-LOOP										
K	Gain Constant, I_{OUT}/V_{IN}, $I_{OUT} = \pm 100$ mA	B	12	5	Note 1	0.85	1	1.15	I	A/V
I_{OS}	Output Offset Current	B	12	5	5	−35	5	35	I	mA
		B	12	8	8	−40	5	40	I	mA
		B	12	2	2	−40	5	40	I	mA
		B	4.5	2	2	−40	5	40	I	mA
		B	20	2	2	−40	5	40	I	mA
		B	20	16	16	−40	5	40	I	mA
I_Q	Quiescent Supply Current	B	12	5	Open		25	50	I	mA
		D	12	5	Open		20	50	I	mA
		Standby	12	5	Open		12	25	I	mA
		B	20	5	Open		40	100	I	mA
		D	20	5	Open		25	100	I	mA
		Standby	20	5	Open		20	50	I	mA
I_{OUT}	Maximum Output Current	B	12	5	Note 2	±0.75	±1		I	A
	$R_L = 5\Omega$	D	12	5	Note 2	±2	±2.5		I	A
V_{SAT}	Total Saturation Voltage, $I_{OUT} = \pm 2$ A (Note 3)	D	12	5	Note 2		1.7	2	I	V
R_{OUT}	Standby Output Resistance (Note 4)	Standby	12	5	Open	1	4		I	kΩ
I_{IH}	Select High Current (20 V)	B	12	5	5		0	10	I	μA
I_{IL}	Select Low Current (0 V)	D	12	5	5		−10	−200	I	μA
I_{IL}	Oscillator Low Current (0.4 V)	Standby	12	5	5		−100	−400	I	μA
I_{BREF}	Reference Voltage Bias Current	Standby	12	5	Open	0.2	0.6	1	I	mA

EL2007
High Efficiency Precision Servo Driver

Electrical Characteristics — (Continued) $T_J=T_A=25°C$, $R_L=10\Omega$ (see test figure)

	Parameter	Mode	Volts V_S	Volts V_{REF}	Volts V_{IN}	Min.	Typ.	Max.	Test Level	Units
CURRENT SENSE AMPLIFIER										
A3	Current Sense Amp Gain, Pin 5 = ±400 mV	Standby	12	5	Open	3.6	4	4.4	I	V/V
V_{OSO}	Current Sense Amp Output Offset	Standby	12	5	Open	−20	5	20	I	mV
		Standby	12	8	Open	−30	5	30	I	mV
		Standby	12	2	Open	−30	5	30	I	mV
		Standby	4.5	2	Open	−30	5	30	I	mV
		Standby	20	2	Open	−30	5	30	I	mV
		Standby	20	16	Open	−30	5	30	I	mV
RVRR	Reference Voltage Rejection Ratio	Standby	20	Note 5	Open	50	75		I	dB
PSRR	Power Supply Rejection Ratio	Standby	Note 6	2	Open	50	75		I	dB
CMRR	Common-Mode Rejection Ratio Pin 4 = Pin 5 = ±500 mV	Standby	12	5	Open	50	75		I	dB
I_{OUT}	Output Source Current	Standby	12	5	Open	+5	+10		I	mA
I_B	Input Current	Standby	12	5	Open	0.2	0.6	1	I	mA
ERROR AMPLIFIER										
V_{OS}	Offset Voltage	B	12	5	Open	−10	2	10	I	mV
		B	12	8	Open	−10	2	10	I	mV
		B	12	2	Open	−10	2	10	I	mV
		B	4.5	2	Open	−10	2	10	I	mV
		B	20	2	Open	−10	2	10	I	mV
		B	20	16	Open	−10	2	10	I	mV
RVRR	Reference Voltage Rejection Ratio	B	20	Note 5	Open	50	75		I	dB
PSRR	Power Supply Rejection Ratio	B	Note 6	2	Open	50	75		I	dB
I_{OUT}	Output Current	B	12	5	Open	±5	±20		I	mA
DRIVER AMPLIFIER										
A2	Driver Amp Gain, I_{OUT} = ±750 mA	B	12	5	Note 1	10	17	20	I	V/V
f_{OSC}	Switching Frequency, I_{OUT} = ±500 mA	D	12	5	Note 1	20	30	40	I	kHz
	Duty Cycle, I_{OUT} = ±500 mA	D	12	5	Note 1	35	45	55	I	%
V_S	Supply Voltage Operating Range	Guaranteed by above tests				4.5	12	20	I	V
V_{REF}	Reference Operating Range	Guaranteed by above tests				2	5	V_S-4	I	V

Note 1: V_{IN} is adjusted to set I_{OUT}.

Note 2: $V_{IN}=2V$ for $I_{OUT}<0A$, and $V_{IN}=8V$ for $I_{OUT}>0A$.

Note 3: Total Saturation Voltage includes the drops across both the PNP and NPN output transistors and the 500 mV drop across the 0.25Ω current sense resistor. $R_L=5\Omega$.

Note 4: $V_{OUT}=V_S/2$.

Note 5: $2V<V_{REF}<16V$.

Note 6: $4.5V<V_S<20V$.

Note 7: Mode B is forced with pin 2 = 2.0 V and pin 3 open. Mode D is forced with pin 2 = 0.6 V and pin 3 open. Standby is forced with pin 2 = 0.6 V and pin 3 = 0.4 V.

External Component Guide

Component	Recommended Value	Purpose	Effect		Comments
			Smaller	Larger	
C_C+, C_C-	0.01μF	A2 Compensation	Oscillation	Crossover	Optimizes linear driver to motor
C_{OSC}	0.001μF	PWM Oscillator	Higher Frequency	Lower Frequency	Switching Frequency f=30 kHz@0.001μF
$R_{CS}+$, $R_{CS}-$	0.25Ω	Senses output current	Higher I_{OS}	Lower $I_{O\,max}$	$R_{CS} \le \frac{0.5\ V}{I_{O\,max}}$
R_{IN}	10kΩ	Sets Overall Gain Constant	Higher Gain	Lower gain	$K = \frac{R_{CF}}{4 \times R_{CS} \times R_{IN}}$
R_{CF}	10kΩ	Current Sense Amp Feedback	Loads A3	ok	
R_O	100Ω	Stabilize A1	Oscillation	Oscillation	Use the values shown
C_O	0.01μF				
R_B	2.7Ω ± 10%	Filter the supply to the control circuit	Possible jitter in switch mode	Thermal Runaway	May not be necessary
C_B	47μF			ok	
R_F	10kΩ–100kΩ	R_F, C_{F1} cancel the motor pole and set the loop gain	Loop Oscillations	Loop Oscillations	$C_{F2} = \frac{30.4\ R_{CS}}{L_M \cdot R_{CF}\ (2\ \pi\ BW)^2}$ $C_{F1} = \frac{60.7\ R_{CS}}{R_M \cdot R_{CF} \cdot 2\ \pi\ BW}$ $R_F = \frac{L_M}{R_M \cdot C_{F1}}$
C_{F1}	1nF–4.7nF				
C_{F2}	0–1nF	Filters switching transients	Jitter in switch mode	Loop Oscillations	
R_{A3}	5kΩ	Provides sink current for A3	$I_{quiescent}$ increases	Limits swing of A3	$I_{SINK} = \frac{V_{O\,min}}{R_{A3}}$

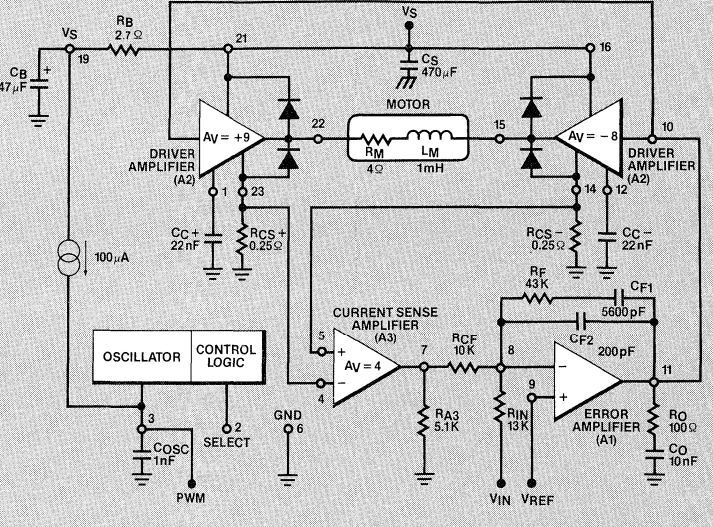

Design Example

EL2007
High Efficiency Precision Servo Driver

Design Example

Given the following design parameters, calculate the external components required to optimize the performance of the EL2007.

System Requirements:

1.6 Amps Max	Gain = 750 mA/V
Bandwidth = 10 kHz	V_{REF} = 5 V

Current Sense Amp Load = 5 k to V_{REF}

Switching frequency > 20 kHz

Motor Characteristics: $R_M = 4\,\Omega$ $L_M = 1$ mH

Step 1. System-Dictated Components

a. $R_{CS}+$ and $R_{CS}-$

The optimum value of R_{CS} times the maximum output current should equal 400 mV. This ensures that the input signal to the current sense amp is as large as possible without ever overloading those inputs.

$$R_{CS}+ = R_{CS}- = +0.4\,V/I_{OUT}\,(max) = 0.4/1.6 = 0.25\,\Omega$$

Power Dissipation

$$P = I^2 \cdot R \qquad P_{Dmax} = (1.6)^2 \cdot 0.25 = 0.64\,W$$

b. R_{CF}

Choose R_{CF} to be 10 k.

This is a convenient, arbitrary value that is a compromise between loading of A3 and high-impedance pick-up problems.

c. R_{A3}

Amplifier A3 must be loaded to provide output sink capability. The amount of sink current required is 2 V divided by the load, in this case R_{CF} and another load of perhaps 5 k in a different part of the overall system (for example the input of an integrator). The minimum value of A3's output is 2 V less than V_{REF}, hence:

$$R_{A3} = (V_{REF} - 2)/I_{SINK\,(max)} = 3/(2/3.3\,k) = 5\,k$$

d. R_{IN}

Use R_{IN} to set the overall gain constant, K, because R_{IN} does not affect any other parameters.

$$R_{IN} = R_{CF}/(4 \cdot R_{CS} \cdot K) = 10\,k/(4 \cdot 0.25 \cdot 0.75) = 13.3\,k$$

Step 2. Motor Compensation Components

The design equations for the compensation components are derived in the loop operation and compensation section of this data sheet. The value for the bandwidth, BW, is not as straightforward as most of the other parameters. Certainly the bandwidth should be large enough so the electrical system adds a minimum of phase-shift and the overall response is dominated by the slower mechanical system; but too wide a bandwidth will only introduce more noise into the loop. Usually the overall servo system will be designed with a bandwidth of 500 Hz to 2500 Hz, so an electrical bandwidth of 10 times that will only introduce 6° of phase shift. The small signal rise time of the current in the motor for a step function input voltage is approximately: $t_{RISE} = 0.35/BW$.

a. C_{F2}

$$C_{F2} = (30.4 \cdot R_{CS})/(L_M \cdot R_{CF} \cdot (2\pi\,BW)^2) = 30.4 \cdot 0.25/(1\,mH \cdot 10\,k\,(2\pi \cdot 10\,kHz)^2) = 193\,pF$$

b. C_{F1}

$$C_{F1} = (60.7 \cdot R_{CS})/(R_M \cdot R_{CF} \cdot 2\pi\,BW) - C_{F2} = 60.7 \cdot 0.25/(4 \cdot 10\,k \cdot 2\pi \cdot 10\,kHz) - 193\,pF = 5{,}845\,pF$$

c. R_F

$$R_F = L_M/(R_M \cdot C_{F1}) = 1\,mH/(4 \cdot 5{,}845\,pF) = 42.77\,k$$

The linear power amplifier A2 requires compensation capacitors C_C+ and C_C-; the derivation of the following formula is in the detailed circuit descriptions.

d. C_C+ and C_C-

$$C_C+ = C_C- = L_M/(R_M \cdot 10\,k) = 1\,mH/(4 \cdot 10\,k) = 0.025\,\mu F$$

Step 3. EL2007 Components

a. C_{OSC}

$C_{OSC} = 0.001\,\mu F \cdot 30\,kHz/f_{OSC}$, Choose $C_{OSC} = 0.001\,\mu F$ initially

Capacitor C_{OSC} determines the switching frequency of the class D pulse width modulator. The switching frequency and the L_M/R_M time constant of the motor determine how much ripple there is in the output current. Usually, the mechanical response of the motor to this ripple is negligible. However this AC signal does generate power losses in the motor. Therefore, efficiency is better when the ripple is minimized, but the EL2007 power transistors have finite switching times and losses that limit how fast the oscillator can operate. Typically, the efficiency worsens for oscillator frequencies above 35 kHz. It is easy to change C_{OSC} and monitor the supply current to evaluate efficiency for a given motor.

b. R_O and C_O

Choose $R_O = 100\,\Omega$ and $C_O = 0.01\,\mu F$

The values of R_O and C_O should not be changed, they compensate the internal circuitry of A2.

c. R_B and C_B

R_B and C_B form an optional filter between the main power supply and the internal control circuitry's supply, pin 19. If the main supply is very well bypassed with a good quality capacitor near the EL2007, then R_B and C_B are not required and pin 19 should be shorted to pins 16 and 21. To evaluate the need for R_B and C_B, check the very high current switch mode performance without them.

The maximum value of R_B is 2.7 Ω (±20%).

Step 4. Standard Values

The components just calculated should be rounded off to the nearest standard value available. All components can be 20% tolerance, however the resulting variation in gain constant would not be desireable. The value of R_{IN}, R_{CF}, $R_{CS}+$ and $R_{CS}-$ should be tighter tolerance (5%) for good control of the gain constant.

Application Information

Circuit Description

The EL2007 is a precision servo driver that contains all of the active circuitry required to control the current in a variety of DC servo motors. To optimize accuracy, speed and efficiency of the system with a given motor the only external parts required are inexpensive passive components.

To form a closed-loop control system three amplifiers are required: the power driver, the current sense amplifier, and the error amplifier. All three of these and special control circuitry are included on the EL2007. Each of these amplifiers on the EL2007 has been optimized for its particular function.

Error Amplifier

Error amplifier, A1, is a conventional operational amplifier that is configured as an inverting summing amplifier. Its gain characteristics are set by a user-selected feedback network. The controlling input, V_{IN}, is fed to the summing node of this amplifier, and is summed with the reference voltage applied to the V_{REF} input. The difference between these two voltages causes a current to flow through the feedback network. The result is an error voltage at the output of the error amplifier which is used to control the power driver.

Power Driver

The power driver A2 is a unique bridge amplifier that can be operated in either a linear, class B mode, or as a switching amplifier in the class D mode. It has a single-ended input and a differential output with the gain preset at $17^{V}/_{V}$ for either mode. The mode is controlled by a logic signal to the SELECT input. A low forces the amplifier into its class D (Pulse Width Modulation) mode. These two modes are provided to allow the user to select the optimum mode for the particular operating requirement. Class B linear mode is recommended for tracking operations where less than 500 mA is required and noise must be kept to a minimum. This is applicable during data transfer or while on track. Class D mode is used for rapid motor movements such as those required during seek operations.

Current Sense Amplifier

The current sense amplifier A3 is a differential input instrumentation amplifier with a preset gain of $4^{V}/_{V}$. It senses motor current by taking the voltages from the two current sense resistors $R_{SC}+$ and $R_{SC}-$. It is the value of these current sense resistors and the values of R_{IN} and R_{CF} that set the gain constant ($K=I_{OUT}/V_{IN}$) of the loop. The inputs from the current sense resistors are then amplified and summed with the V_{IN} input to complete the servo loop.

Oscillator

An oscillator with a frequency of 30 kHz is provided to switch the amplifier when the class D mode is selected. The PWM input is controlled from this pin. By pulling this pin low while the SELECT pin is low the amplifier can be put into a high output impedance mode.

Logic Control Inputs

There are three modes of operation for the EL2007. They are operation in the class B mode, in the class D mode and the STANDBY mode. These three modes of operation (see Mode Control Truth Table) of the EL2007 are controlled by the SELECT input (pin 2) and the PWM input (pin 3). The SELECT input is a high-impedance logic input with TTL thresholds. The PWM input is also the oscillator capacitor connection. This capacitor is charged by an internal current source that supplies approximately 100 μA. Operation of the oscillator requires about 90 μA so it is important not to draw over 10 μA from this input. *For proper oscillator operation the PWM input should be driven by an open collector without any external pull-up resistor.*

Mode Control Truth Table

MODE	SELECT	PWM
Class B	1	X
Class D	0	Open
Standby	0	0

Power-Up

The EL2007 powers up without any transient being applied to the motor if the V_{IN} input voltage is equal to the V_{REF} input voltage, and if this voltage is within the normal operating range. If these conditions cannot be met at power-up and power should not be applied to the motor, the control logic inputs should be held low for power-up in the STANDBY mode.

Power-Down

The EL2007 will continue to operate normally with reduced supply voltage (down to 4.5 V) as long as the reference voltage is 2 V less than the supply voltage and greater than 2 V above ground.

If the reference voltage is within 1.5 V of the supply voltage the output will force maximum current through the motor. If no current is desired through the motor during power-down then the control inputs should be held low forcing the output into the STANDBY mode.

If power is required through the motor during power-down, then it should be in the direction corresponding to a low V_{IN} signal (pin 15 low and pin 22 high). This will prevent the problems caused by the supply dropping to within 1.5 V of V_{REF}. If a power-down logic signal is available, it can be used to force V_{IN} or pin 8 low. This will force the motor drive outputs in the same direction as the supply decays. The only change in this would be if the reference voltage decays faster than the supply voltage.

Evaluation

The EL2007 is designed to be used with a single supply voltage. This operation requires a V_{REF} voltage above ground. As most function generators are ground-referenced, the circuit shown below is an easy way to offset the generator.

Op amp input offset voltage and resistor mis-match will introduce additional output offset current into the motor. For a unity gain circuit with 0.1% resistors and a 5 mV offset op amp the worst case additional output offset current is 20 mA.

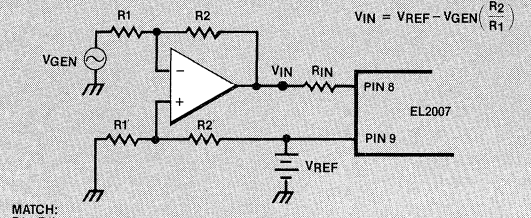

Offsetting the Generator Input

Loop Operation and Compensation

The following equivalent circuit (figure 1) is used to calculate the passive components required for the feedback network of the error amplifier. The forward gain of the loop is defined as $G(s)=I_{OUT}/I_{IN}$ and the feedback factor is $H(s)=I_F/I_{OUT}$. For stability the product, $G(s)\bullet H(s)$, cannot equal −1.

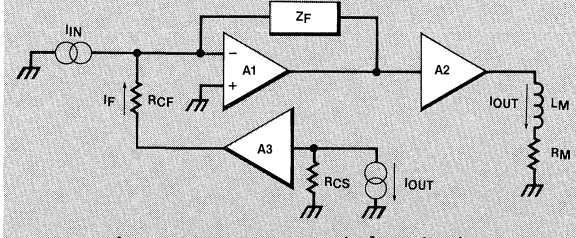

Figure 1. System Loop-Equivalent Circuit

$$G(s) = I_{OUT}/I_{IN} = \frac{Z_F \cdot A2}{R_M} \frac{1}{sL_M/R_M + 1} \quad (1)$$

$$H(s) = I_F/I_{OUT} = \frac{R_{CS} \cdot A3}{R_{CF}} \quad (2)$$

$$G(s)\,H(s) \neq -1 \quad (3)$$

$$-1 \neq \frac{Z_F \cdot A2}{R_M} \frac{1}{sL_M/R_M + 1} \frac{R_{CS} \cdot A3}{R_{CF}} \quad (4)$$

Z_F can be any network that satisfies the stability criterion above. For maximum bandwidth, Z_F should have a zero that cancels the pole due to the L_M/R_M time constant of the motor. Z_F should also have the dominant pole of the feedback loop and another non-dominant pole for additional filtering that is desirable in the class D switching mode. The following network (figure 2) for Z_F has these characteristics.

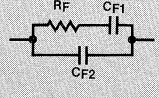

Figure 2. Feedback Network

$$Z_F = \frac{sR_F \cdot C_{F1} + 1}{s(C_{F1} + C_{F2})\left(\frac{sR_F \cdot C_{F1} \cdot C_{F2}}{C_{F1} + C_{F2}} + 1\right)} \quad (5)$$

In this network the zero is due to R_F and C_{F1}. The dominant pole is due to C_{F1} in parallel with C_{F2}. The non-dominant pole is due to R_F and the series combination of C_{F1} and C_{F2}. C_{F1} is usually much greater than C_{F2} so there is minimal interaction.

To cancel the motor pole, the zero of the feedback network is used. The resulting equation is:

$$R_F \cdot C_{F1} = L_M/R_M \quad (6)$$

Substituting this Z_F into the stability equation (3) gives:

$$G(s)\,H(s) = \frac{A2 \cdot R_{CS} \cdot A3}{s(C_{F1}+C_{F2})\left(\frac{sR_F \cdot C_{F1} \cdot C_{F2}}{C_{F1}+C_{F2}}+1\right) R_M \cdot R_{CF}} \quad (7)$$

The frequency where the magnitude of G(s) H(s) equals 1 is the bandwidth of the closed-loop system. It will be useful to refer to this frequency so we will define it as BW. For a feedback system to have no output overshoot for a squarewave input, there should be about 60° of phase margin. This will result in a very stable system and is the criteria that we will use in calculating the values for Z_F. If G(s) H(s) is equal to 1 at one half the frequency of the non dominant pole then there will be 22° of phase shift due to that pole. There will also be 90° of phase shift due to the dominant pole resulting in about 68° of phase margin. This meets our criteria so we will use it. The bandwidth of the system can now be defined as:

$$BW = \frac{1}{2}\left(\frac{1}{2\pi\frac{R_F \cdot C_{F1} \cdot C_{F2}}{C_{F1}+C_{F2}}}\right) = \frac{C_{F1}+C_{F2}}{4\pi R_F \cdot C_{F1} \cdot C_{F2}} \quad (8)$$

By again substituting into the stability equation (7):

$$G(s)\,H(s) = \frac{A2 \cdot R_{CS} \cdot A3}{R_M \cdot R_{CF}\, s(C_{F1}+C_{F2})\left(\frac{s}{4\pi BW}+1\right)} \quad (9)$$

Now let $s = j2\pi BW$ and magnitude G(s) H(s)=1:

$$1 = \frac{A2 \cdot R_{CS} \cdot A3}{R_M \cdot R_{CF}\, 2\pi BW\,(C_{F1}+C_{F2})\,1.12} \quad (10)$$

(Note: $|j/2+1| = 1.12$)

Solve equation (10) for $(C_{F1}+C_{F2})$, take the motor pole cancellation constraint equation (6) and substitute those results into the bandwidth definition equation (8) and solve for C_{F2}. The result is:

$$C_{F2} = \frac{A2 \cdot R_{CS} \cdot A3}{R_{CF}\, 2(1.12)\, L_M\, (2\pi BW)^2} \quad (11)$$

Equations (10) and (11) are now solved for C_{F1} resulting in:

$$C_{F1} = \frac{A2 \cdot R_{CS} \cdot A3}{R_M \cdot R_{CF}\, 1.12\,(2\pi BW)} - C_{F2} \quad (12)$$

Rewriting equation (6) for R_F yields:

$$R_F = \frac{L_M}{R_M \cdot C_{F1}} \quad (13)$$

To simplify this further we can now substitute in the constants of the EL2007. These constants are the gains of the current sense amplifier, A3=4, and the gain of the power amplifier, A2=17. This yields the final equations for the feedback network:

$$C_{F2} = \frac{30.4\, R_{CS}}{L_M \cdot R_{CF}\,(2\pi BW)^2} \quad (14)$$

$$C_{F1} = \frac{60.7\, R_{CS}}{R_M \cdot R_{CF} \cdot 2\pi BW} \quad (15)$$

$$R_F = \frac{L_M}{R_M \cdot C_{F1}} \quad (16)$$

Detailed Circuit Description: Current Sense Amplifier

The current sense amplifier is a differential input amplifier with low offset and good common-mode rejection for signals above and below ground. Common-mode inputs below ground occur when the EL2007 is operated in the switched mode.

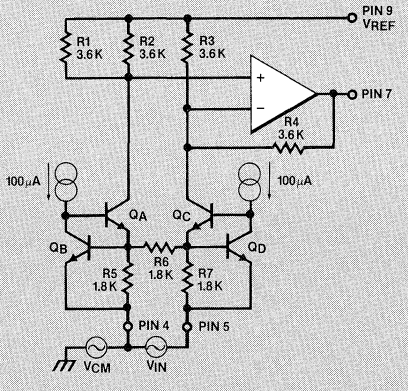

Figure 3. Current Sense Amplifier

EL2007
High Efficiency Precision Servo Driver

To simplify analysis of the current sense amplifier, assume that all of the transistors shown in Figure 3 have zero base current. Transistor Q_b operates with a constant V_{CE} and a constant I_C; therefore the base-emitter voltage of Q_b is constant and the current in R5 is constant. The same is true of Q_d and R7. Since the V_{BE} of Q_b and Q_d are constant, the voltage across R6 is equal to the differential input voltage, V_{IN}, and everything is independent of the common-mode voltage, V_{CM}.

The collector current of Q_a is equal to the current in R5 less the current in R6. Similarly the collector current in Q_c is equal to the current in R7 plus the current in R6. Both of these collector currents are independent of V_{REF} and V_{CM}. This results in good high-frequency CMRR. The conversion of the differential input voltage into current allows easy level shifting to the reference voltage.

A differential amplifier and four equal value resistors convert the differential current to a single-ended output voltage. This configuration has a gain of 2, resulting in an overall gain of $4^V/_V$. The maximum allowable differential input voltage is determined by the current that flows in R6. This current cannot exceed the current in R5 or R7. Since R5, R6, and R7 are all equal, the maximum input voltage is one V_{BE}. This is about 500 mV over temperature.

Power Driver—Switched-Mode

The switched-mode (class D) section (see figure 4) of the EL2007 consists of a triangle wave oscillator, two comparators, and the output power transistors that are connected as an "H" bridge.

The oscillator circuit uses a 0.001μF external capacitor on pin 3 to set the frequency at approximately 30 kHz. The voltage on the capacitor is buffered by an emitter follower, Q1. Comparators U1 and U2 monitor the buffered voltage and compare it to the voltage at the R1, R2, R3 resistive divider string. When U1 senses the oscillator voltage equal to the upper trip voltage, U1 sets the flip-flop and turns on the 2I current source that discharges the external capacitor. When U2 senses the buffered voltage equal to the lower trip voltage, U2 resets the flop-flop turning off the 2I current source, allowing the external capacitor to recharge. The result is a triangle wave at the inputs of U1 and U2 that is centered at half the supply voltage with a peak-to-peak amplitude equal to 10% of the supply voltage.

Resistors R4, R5 and R6 level-shift the voltage at the input of U1 and U2 by 5% of the supply. The resulting voltage applied to comparator U3 is a triangle wave going from 50% to 60% of the supply. Similarly the voltage fed to U4 is from 40% to 50% of the supply. The signal on pin 10 determines if U3 or U4 switches and for how long they stay on.

The output of U3 switches a transistor that drives one side of the "H" bridge and U4 drives the other. Level shifting the triangle wave to the comparators ensures that only one side of the bridge is on at any time. This maximizes efficiency and eliminates the possibility of overlapping conduction of the output power bridge.

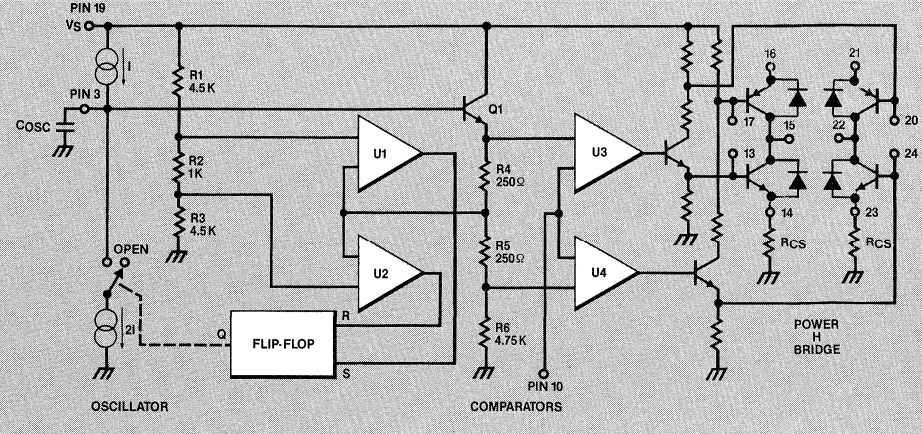

Figure 4. Pulse Width Modulator

Power Driver—Linear Mode

In the linear mode (class B), the power driver consists of two identical amplifiers that are connected as a bridge amplifier (figure 5). One amplifier is set up with an inverting gain of $-8^{V}/_{V}$ and the other with a noninverting gain of $9^{V}/_{V}$. This gives a total gain of $17^{V}/_{V}$ for the bridge amplifier.

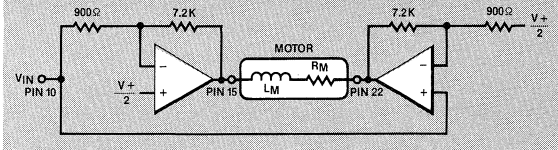

Figure 5. Linear Mode Driver Amplifier

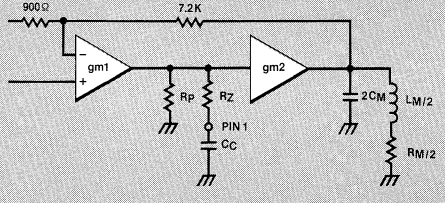

Figure 6. One A2 Amplifier—Equivalent Circuit and Load

Figure 6 shows the unusual amplifier configuration chosen to give maximum output swing and high slew rate. To understand the compensation capacitors, C_C+ and C_C-, we must look at the equivalent circuit of one of the two amplifiers. From figure 6 it is apparent that the open-loop gain of the amplifier is a function of the load impedance. The forward open-loop gain with no resistive feedback can be expressed as:

$$A_{VOL} = \qquad (17)$$

$$gm1\left(\frac{R_P(1+s\,R_Z\,C_C)}{1+sC_C(R_P+R_Z)}\right)\cdot\left(gm2\,\frac{(R_M/2)(1+s\,L_M/R_M)}{1+s\,C_M\,R_M+s^2\,C_M\,L_M}\right)$$

For minimum phase shift in the critical low frequency region, the zero due to the L_M/R_M time constant should be canceled by the pole due to C_C. The resulting open-loop gain will be a bandpass with the normal zero at the origin moved out to a higher frequency near the motor coil resonance. This is a two pole, one zero circuit and is stable with resistive feedback. The EL2007 constants for equation (17) are:

$gm1 = 1\,mMho$, $gm2 = 2\,Mho$, $R_P = 10\,k$, $R_Z = 100\,\Omega$.

This and the cancellation requirement give the following design equation:

$$C_C = \frac{L_M}{R_M \cdot 10\,k} \qquad (18)$$

The high-frequency response of this amplifier is a function of the coil impedance and the resistor R_Z in series with C_C. This response is usually not important in a servo system because it is well above the bandwidth of the total loop. Because the feedback resistors used in the power driver are internal, the open-loop response cannot be measured. To measure the closed-loop response, the circuit shown in figure 7 below is recommended. The 10 k potentiometer is adjusted for an output current of about 50 mA to eliminate crossover distortion in the small signal response.

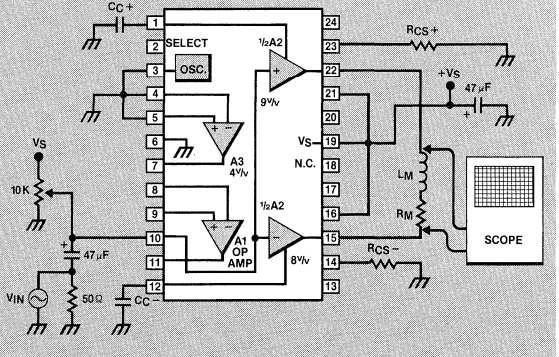

Figure 7. Evaluation Circuit for A2

For additional applications help dial (800) 821-7429, in California (408) 945-1323.

EL2007
High Efficiency Precision Servo Driver

Test Circuit

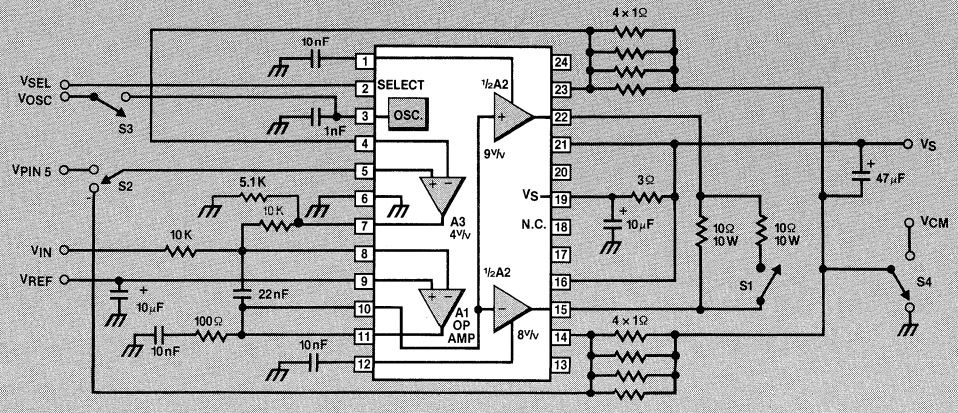

ALL RESISTORS 1%

Typical Performance Curves

Maximum Power Dissipation

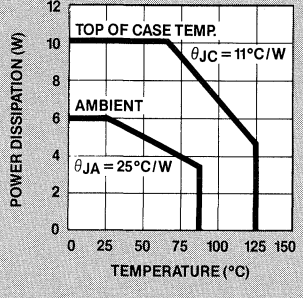

Error Amp Frequency Response

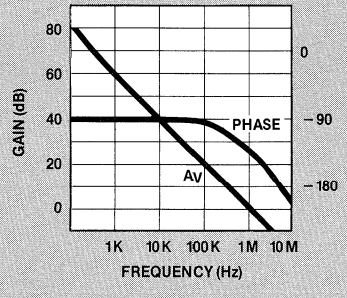

Current Sense Amp Frequency Response

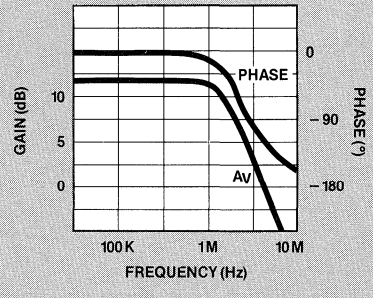

Current Sense Amp Common Mode Rejection

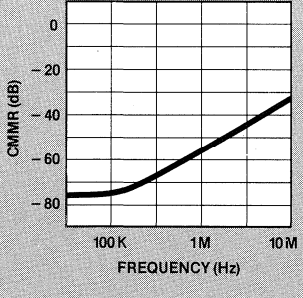

Burn-In Circuit

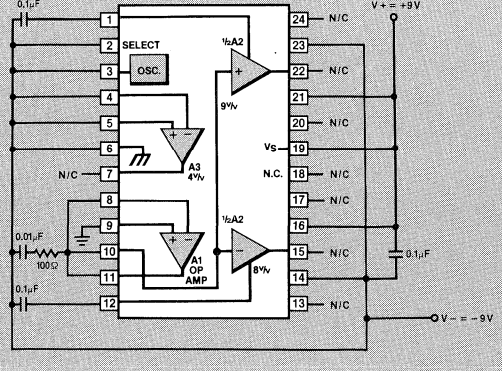

élantec
HIGH PERFORMANCE ANALOG INTEGRATED CIRCUITS

EL2017/EL2017C

High Efficiency Precision Servo Controller

Features

- Low Saturation Voltage
- Precision Current Sense Amplifier
- Efficient Class D Switch Mode
- Linear Class B Track Mode
- Single Supply Operation 4.5 to 20V

Applications

- Winchester Disc Head Positioning Servo
- 3.5" Disc Drive Servo
- Galvo Motors
- Robotics
- DC Motor Controls

Ordering Information

Part No.	Temp. Range	Pkg.	Outline#
EL2017CN	–25 to +85°C	20-Pin P-Dip	MDP0008
EL2017CJ	–25 to +85°C	20-Pin Cerdip	MDP0016
EL2017J	–55 to +125°C	20-Pin Cerdip	MDP0016
EL2017J/883	–55 to +125°C	20-Pin Cerdip	MDP0016

Connection Diagram

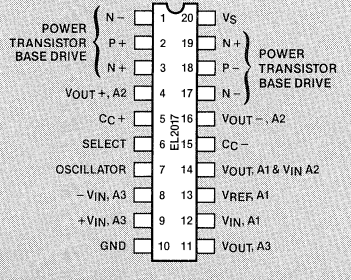

General Description

The EL2017 is designed to reduce the power consumption and space required for closed-loop control of voice coil actuator motors in disc head positioning servos and other precision servos. The EL2017 includes the current sense amplifier, bridge output power drive and the error amplifier.

The EL2017 saves power by using a Class D (chopper) mode output drive during the high current "seek" operation. System dissipation is reduced a factor of three providing higher reliability and easier heat management. During the lower current "tracking" operation, the amplifier switches to conventional Class B analog mode for noise-free data retrieval. A logic input selects the operation mode. The bridge output stage is designed for minimum saturation voltage allowing efficient operation with single supply voltage from 4.5 to 20V.

A low offset differential amplifier senses the output current in the bridge ground return and provides a proportional voltage added to the externally-generated common-mode reference voltage. This closes the loop and makes the servo amplifier a voltage in, current out system.

The EL2017 contains all of the control circuitry required for the application. This allows the circuit designer to select power transistors and catch diodes to meet the output voltage and current specifications of almost any application. External transistors also allow greater flexibility for thermal and space management.

The EL2017 is available in both 20-lead dual-in-line plastic or ceramic packages.

Typical Application

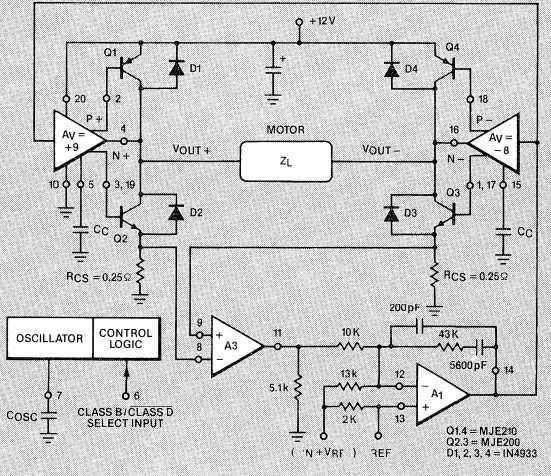

For design equations and applications examples please refer to the EL2007 data sheet.

EL2017/EL2017C

High Efficiency Precision Servo Controller

Absolute Maximum Ratings

V_S	Supply Voltage	20 V
V_{IN}	Input Voltage Range (any logic pin)	−0.3 V to V_S
	Sense Amp Input Voltage Range	−1.5 V to V_S
	Sense Amp Differential Input Voltage Range	±5 V
T_J	Junction Temperature	150°C
T_A	Operating Temperature Range	
	EL2017	−55°C to +125°C
	EL2017C	−25°C to +85°C
	Lead Temperature (soldering, 10 seconds)	300°C
T_{ST}	Storage Temperature	−65°C to +150°C
P_D	Power Dissipation (T_A=25°C)	1.25 W

Important Note: **All parameters having Min./Max. specifications are guaranteed. The Test Level column indicates the specific device testing actually performed during production and Quality Assurance inspection. Elantec performs most electrical tests using modern high-speed automatic test equipment, specifically the LTX 77 Series system. Unless otherwise noted, all tests are pulsed tests, therefore $T_J = T_C = T_A$.**

Test Level **Test Procedure**

I 100% production tested and QA sample tested per QA test plan QCX0002.

II 100% production tested at T_A=25°C, and QA sample tested at T_A=25°C, T_{MAX} and T_{MIN} per QA test plan QCX0002.

III QA sample tested per QA test plan QCX0002.

IV Parameter is guaranteed (but not tested) by Design and Characterization Data.

V Parameter is typical value for information purposes only.

Electrical Characteristics $T_J = T_A = 25°C$, EL2017, EL2017C (Note 7)

	Parameter	Mode	Volts			Min.	Typ.	Max.	Test Level	Units
			V_S	V_{REF}	V_{IN}					
SYSTEM, CLOSED-LOOP										
K	Gain Constant, I_{OUT}/V_{IN}, I_{OUT} = ±100 mA	B	12	5	Note 1	0.85	1	1.15	I	A/V
I_{OS}	Output Offset Current	B	12	5	5	−35	5	35	I	mA
		B	12	8	8	−40	5	40	I	mA
		B	12	2	2	−40	5	40	I	mA
		B	4.5	2	2	−40	5	40	I	mA
		B	20	2	2	−40	5	40	I	mA
		B	20	16	16	−40	5	40	I	mA
		Standby	12	5	5	−2	0	2	I	mA
I_Q	Quiescent Supply Current	B	12	5	Open		25	50	I	mA
		D	12	5	Open		20	50	I	mA
		Standby	12	5	Open		12	25	I	mA
		B	20	5	Open		40	100	I	mA
		D	20	5	Open		25	100	I	mA
		Standby	20	5	Open		20	50	I	mA
I_{OUT}	Output Drive Current	B	12	5	Note 2	15	30		I	mA
		D	12	5	Note 2	45	60		I	mA
R_{OUT}	Standby Output Resistance (Note 4)	Standby	12	5	Open	1	4		I	kΩ
I_{IH}	Select High Current (20 V)	B	12	5	5		0	10	I	μA
I_{IL}	Select Low Current (0 V)	D	12	5	5		−10	−200	I	μA
I_{IL}	Oscillator Low Current (0.4 V)	Standby	12	5	5		−100	−400	I	μA
I_{BREF}	Reference Voltage Bias Current	Standby	12	5	Open	0.2	0.6	1	I	mA

Electrical Characteristics — (Continued) $T_J = T_A = 25°C$, EL2017, EL2017C (Note 7)

	Parameter	Mode	Volts			Min.	Typ.	Max.	Test Level	Units
			V_S	V_{REF}	V_{IN}					
CURRENT SENSE AMPLIFIER										
A3	Current Sense Amp Gain, Pin 9 = ±400 mV	Standby	12	5	Open	3.6	4	4.4	I	V/V
V_{OSO}	Current Sense Amp Output Offset	Standby	12	5	Open	−20	5	20	I	mV
		Standby	12	8	Open	−30	5	30	I	mV
		Standby	12	2	Open	−30	5	30	I	mV
		Standby	4.5	2	Open	−30	5	30	I	mV
		Standby	20	2	Open	−30	5	30	I	mV
		Standby	20	16	Open	−30	5	30	I	mV
RVRR	Reference Voltage Rejection Ratio	Standby	20	Note 5	Open	50	75		I	dB
PSRR	Power Supply Rejection Ratio	Standby	Note 6	2	Open	50	75		I	dB
CMRR	Common-Mode Rejection Ratio Pin 8 = Pin 9 = ±500 mV	Standby	12	5	Open	50	75		I	dB
I_{OUT}	Output Source Current	Standby	12	5	Open	+5	+10		I	mA
I_B	Input Current	Standby	12	5	Open	0.2	0.6	1	I	mA
ERROR AMPLIFIER										
V_{OS}	Offset Voltage	B	12	5	Open	−10	2	10	I	mV
		B	12	8	Open	−10	2	10	I	mV
		B	12	2	Open	−10	2	10	I	mV
		B	4.5	2	Open	−10	2	10	I	mV
		B	20	2	Open	−10	2	10	I	mV
		B	20	16	Open	−10	2	10	I	mV
RVRR	Reference Voltage Rejection Ratio	B	20	Note 5	Open	50	75		I	dB
PSRR	Power Supply Rejection Ratio	B	Note 6	2	Open	50	75		I	dB
I_{OUT}	Output Current	B	12	5	Open	±5	±20		I	mA
DRIVER AMPLIFIER										
A2	Driver Amp Gain, I_{OUT} = ±750 mA	B	12	5	Note 1	10	17	20	I	V/V
f_{OSC}	Switching Frequency, I_{OUT} = ±500 mA	D	12	5	Note 1	20	30	40	I	kHz
	Duty Cycle, I_{OUT} = ±500 mA	D	12	5	Note 1	35	45	55	I	%
V_S	Supply Voltage Operating Range	Guaranteed by above tests				4.5	12	20	I	V
V_{REF}	Reference Operating Range	Guaranteed by above tests				2	5	$V_S - 4$	I	V

Note 1: V_{IN} is adjusted to set I_{OUT}.

Note 2: $V_{IN} = 2V$ for $I_{OUT} < 0A$, and $V_{IN} = 8V$ for $I_{OUT} > 0A$.

Note 3: $2.5V < V_{REF} < 16V$.

Note 4: $V_{OUT} = V_S/2$.

Note 5: $2V < V_{REF} < 16V$.

Note 6: $4.5V < V_S < 20V$.

Note 7: Mode B is forced with pin 6 = 2.0 V and pin 7 open. Mode D is forced with pin 6 = 0.6 V and pin 7 open. Standby is forced with pin 6 = 0.6 V and pin 7 = 0.4 V.

Note 8: $5.5V < V_S < 20V$.

EL2017/EL2017C

High Efficiency Precision Servo Controller

Electrical Characteristics $T_J=T_A=T_{MIN}, T_{MAX}$, for the Military EL2017 only (Output Transistors 25°C)

	Parameter	Mode	Volts V_S	Volts V_{REF}	Volts V_{IN}	Min.	Typ.	Max.	Test Level	Units
SYSTEM, CLOSED-LOOP										
K	Gain Constant, I_{OUT}/V_{IN}, $I_{OUT}=\pm100$ mA	B	12	5	Note 1	0.85	1	1.15	I	A/V
I_{OS}	Output Offset Current	B	12	5	5	−35	5	35	I	mA
		B	12	8	8	−40	5	40	I	mA
		B	12	2.5	2.5	−40	5	40	I	mA
		B	5.5	2.5	2.5	−40	5	40	I	mA
		B	20	2.5	2.5	−40	5	40	I	mA
		B	20	16	16	−40	5	40	I	mA
		Standby	12	5	5	−2	0	2	I	mA
I_Q	Quiescent Supply Current	D	12	5	Open		20	50	I	mA
		Standby	12	5	Open		12	25	I	mA
		D	20	5	Open		25	100	I	mA
		Standby	20	5	Open		20	50	I	mA
I_{OUT}	Output Drive Current	B	12	5	Note 2	10	20		I	mA
R_{OUT}	Standby Output Resistance (Note 4)	Standby	12	5	Open	1	4		I	kΩ
I_{IH}	Select High Current (20 V)	B	12	5	5		0	10	I	μA
I_{IL}	Select Low Current (0 V)	D	12	5	5		−10	−200	I	μA
I_{IL}	Oscillator Low Current (0.4 V)	Standby	12	5	5		−100	−400	I	μA
I_{BREF}	Reference Voltage Bias Current	Standby	12	5	Open	0.2	0.6	1	I	mA
CURRENT SENSE AMPLIFIER										
A3	Current Sense Amp Gain, Pin 9 = ±400 mV	Standby	12	5	Open	3.6	4	4.4	I	V/V
V_{OSO}	Current Sense Amp Output Offset	Standby	12	5	Open	−20	5	20	I	mV
		Standby	12	8	Open	−30	5	30	I	mV
		Standby	12	2.5	Open	−30	5	30	I	mV
		Standby	5.5	2.5	Open	−30	5	30	I	mV
		Standby	20	2.5	Open	−30	5	30	I	mV
		Standby	20	16	Open	−30	5	30	I	mV
RVRR	Reference Voltage Rejection Ratio	Standby	20	Note 3	Open	50	75		I	dB
PSRR	Power Supply Rejection Ratio	Standby	Note 8	2.5	Open	50	75		I	dB
CMRR	Common-Mode Rejection Ratio Pin 8 = Pin 9 = ±400 mV	Standby	12	5	Open	50	75		I	dB
I_{OUT}	Output Source Current	Standby	12	5	Open	+5	+10		I	mA
I_B	Input Current	Standby	12	5	Open	0.2	0.6	1	I	mA

Electrical Characteristics — (Continued) $T_J = T_A = T_{MIN}, T_{MAX}$, for the Military EL2017 only (Output Transistors 25°C)

	Parameter	Mode	Volts			Min.	Typ.	Max.	Test Level	Units
			V_S	V_{REF}	V_{IN}					
ERROR AMPLIFIER										
V_{OS}	Offset Voltage	B	12	5	Open	−10	2	10	I	mV
		B	12	8	Open	−10	2	10	I	mV
		B	12	2.5	Open	−10	2	10	I	mV
		B	5.5	2.5	Open	−10	2	10	I	mV
		B	20	2.5	Open	−10	2	10	I	mV
		B	20	16	Open	−10	2	10	I	mV
RVRR	Reference Voltage Rejection Ratio	B	20	Note 3	Open	50	75		I	dB
PSRR	Power Supply Rejection Ratio	B	Note 8	2.5	Open	50	75		I	dB
I_{OUT}	Output Current	B	12	5	Open	±5	±20		I	mA
DRIVER AMPLIFIER										
A2	Driver Amp Gain, $I_{OUT} = \pm 750$ mA	B	12	5	Note 1	10	17	20	I	V/V
V_S	Supply Voltage Operating Range	Guaranteed by above tests				5.5	12	20	I	V
V_{REF}	Reference Operating Range	Guaranteed by above tests				2.5	5	$V_S - 4$	I	V

Buffers



TM

élantec

HIGH PERFORMANCE ANALOG INTEGRATED CIRCUITS

Elantec Buffers

ELANTEC Part Number	Description	Warmed up input current (Input impedance)	Continuous output current Drive (Peak output current)	−3 dB Bandwidth (Rise time)	Slew Rate	Supply Current (Max)	Packages
ELH0002	Hybrid "Industry Standard" pinout	±10μA Max. (180kΩ Min.)	±100mA Min. (±400mA)	30 MHz Typ. (12 ns Max.)	200V/μs Typ.	10mA	TO-5 CAN
ELH0033	Hybrid "Industry Standard" pinout	2.5nA Max. (1000MΩ Min.)	±100mA Min. (±250mA)	100MHz Typ.	1000V/μs Min.	24mA	TO-8 CAN
EL2003	Monolithic—Low Cost Excellent Video Buffer Improved ELH0002	25μA Max. (1MΩ Min.)	±105mA (±230mA)	100MHz Typ.	600V/μs Min.	15mA	TO-99 CAN 8 Pin Cerdip 8 Pin P-DIP
EL2004	Fastest Buffer Improved ELH0033	2.5nA Max. (1000MΩ Min.)	±100mA (±250mA)	200 MHz Min. (1 ns Typ.)	2000V/μs Min.	24mA	TO-8 CAN 52 Pin LCC
EL2005	Best Input Stage Buffer Improved ELH0033	1nA Max. (1000MΩ Min.)	±100mA (±250mA)	140MHz Typ.	1000V/μs Min.	24mA	TO-8 CAN
EL2033	Improved Pin for Pin with HA-5033 and HA-5002	25μA Max. (1MΩ Min.)	±105mA (±230mA)	100MHz Typ.	1000V/μs Min.	15mA	8 Pin P-DIP

élantec
HIGH PERFORMANCE ANALOG INTEGRATED CIRCUITS

ELH0002/ELH0002C
Current Amplifier

For New Designs See the EL2003

Features

- 400 mA pulsed output current
- DC to 30 MHz bandwidth
- 200 V/μs slew rate
- Low harmonic distortion
- High input impedance—400 kΩ
- Low output impedance—6 Ω
- High power efficiency
- Operation from ±5 V to ±20 V
- Output voltage swing approaches supply voltage
- MIL-STD-883 devices manufactured in U.S.A.

Applications

- Line driver
- 30 MHz buffer
- High-speed D/A conversion
- Instrumentation buffer
- Precision current source

General Description

The ELH0002/ELH0002C is a general purpose hybrid current amplifier buffer that is built on a single substrate.

The ELH0002 is ideal for current buffering operational amplifiers without changing the characteristics of the Op Amp. The ELH0002 uses a completely symmetrical circuit to provide a low output impedance when both sourcing and sinking current. This means the output will drive coaxial cables and other capacitive loads with equivalent rise and fall times.

The ELH0002 is specified for operation over the −55°C to +125°C military temperature range. The ELH0002C is specified for operation over the −25°C to +85°C temperature range.

Elantec facilities comply with MIL-I-45208A and are MIL-STD-1772 certified. Elantec's Military devices comply with MIL-STD-883B Revision C and are manufactured in our rigidly controlled, ultra-clean facilities in Milpitas, California. For additional information on Elantec's Quality and Reliability Assurance Policy and procedures request brochure QRA–1.

Ordering Information

Part No.	Temp. Range	Pkg.	Outline#
ELH0002CH	−25 to +85°C	TO-5	MDP0001
ELH0002CH/E+	−25 to +85°C	TO-5	MDP0001
ELH0002H	−55 to +125°C	TO-5	MDP0001
ELH0002H/883	−55 to +125°C	TO-5	MDP0001
7801301GX	−55 to +125°C	TO-5	MDP0001
7801301XC	−55 to +125°C	TO-5	MDP0001
ELH0002H/200	−25 to +200°C	TO-5	MDP0001

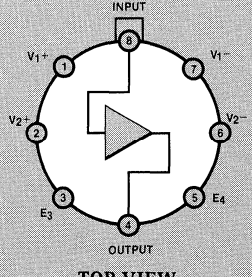

TOP VIEW

Case is electrically isolated.

Equivalent Schematic

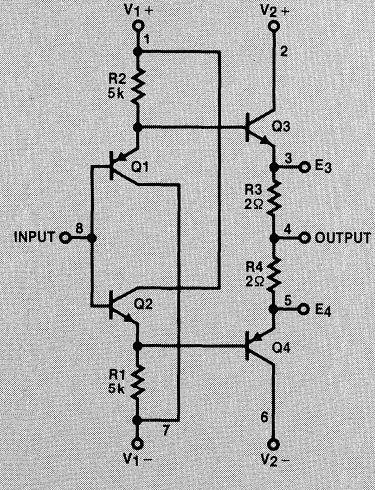

Absolute Maximum Ratings (25°C)

V_S	Supply Voltage	±22V
V_{IN}	Input Voltage	±22V
P_D	Power Dissipation Ambient	600mW
T_{ST}	Storage Temperature	−65°C to +150°C

*(Note 1) ELH0002H/200 −25°C to +200°C

T_A	Operating Temperature Range:	
	ELH0002	−55°C to +125°C
	ELH0002C	−25°C to +85°C
	Steady State Current	±100mA
	Pulsed Output Current (50ms On/1 second Off)	±400mA

Important Note: **All parameters having Min./Max. specifications are guaranteed. The Test Level column indicates the specific device testing actually performed during production and Quality Assurance inspection. Elantec performs most electrical tests using modern high-speed automatic test equipment, specifically the LTX 77 Series system. Unless otherwise noted, all tests are pulsed tests, therefore $T_J = T_C = T_A$.**

Test Level	Test Procedure
I	100% production tested and QA sample tested per QA test plan QCX0002.
II	100% production tested at $T_A = 25°C$, and QA sample tested at $T_A = 25°C$, T_{MAX} and T_{MIN} per QA test plan QCX0002.
III	QA sample tested per QA test plan QCX0002.
IV	Parameter is guaranteed (but not tested) by Design and Characterization Data.
V	Parameter is typical value for information purposes only.

DC Electrical Characteristics

$V_S = \pm 12V$, $T_{MIN} \leq T_A \leq T_{MAX}$

			ELH0002				ELH0002C				
	Parameter	Test Conditions	Min.	Typ.	Max.	Test Level	Min.	Typ.	Max.	Test Level	Units
V_{OS}	Output Offset Voltage	$R_S = 300\Omega$, $R_L = 1k\Omega$		±10	±30	I		±10	±30	II	mV
A_V	Voltage Gain	$R_S = 10k\Omega$, $R_L = 1k\Omega$, $V_{IN} = \pm 10V_{dc}$	0.95	0.97		I	0.95	0.97		II	V/V
R_{IN}	Input Impedance	$R_S = 200k\Omega$, $V_{IN} = \pm 1V_{dc}$, $R_L = 1k\Omega$	180	400		I	180	400		II	kΩ
R_{OUT}	Output Impedance	$R_L = 50\Omega$, $V_{IN} = \pm 1V_{dc}$, $R_S = 10k\Omega$		6	10	I		6	10	II	Ω
V_O	Output Voltage Swing	$V_{IN} = \pm 12V$, $R_L = 1k\Omega$	±10	±11		I	±10	±11		II	V
		$V_S = \pm 15V$, $V_{IN} = \pm 12V$, $R_S = 50\Omega$, $R_L = 100\Omega$, $T_A = 25°C$	±10			I	±10			I	V
	Input Current	$R_S = 10k\Omega$, $R_L = 1k\Omega$		±6	±10	I		±6	±10	II	μA
I_S+	Positive Supply Current	$R_S = 10k\Omega$, $R_L = 1k\Omega$		6	10	I		6	10	II	mA
I_S-	Negative Supply Current	$R_S = 10k\Omega$, $R_L = 1k\Omega$		−6	−10	I		−6	−10	II	mA

Note 1: Elantec's ELH0002H/200 is tested to the ELH0002 DC limits at −25°C, +25°C and +125°C, and the AC limits at 25°C. In addition, the parts are also tested to the DC limits for V_{OS}, A_{VOL} with $R_L = 1k\Omega$, I_{IN}, I_S+ and I_S- at 200°C.

ELH0002/ELH0002C
Current Amplifier

AC Electrical Characteristics $V_S = \pm 12V$, $T_A = 25°C$

	Parameter	Test Conditions	ELH0002 Min.	ELH0002 Typ.	ELH0002 Max.	ELH0002 Test Level	ELH0002C Min.	ELH0002C Typ.	ELH0002C Max.	ELH0002C Test Level	Units
A_v	Voltage Gain	$R_S = 10k\Omega$, $R_L = 1k\Omega$, $V_{in} = 3V_{P-P}$, f = 1kHz	0.95	0.97		I	0.95	0.97		II	V/V
	Current Gain	$V_{in} = 1V_{rms}$, f = 1kHz		40		V		40		V	A/mA
R_{in}	Input Impedance	$R_S = 200k\Omega$, $V_{in} = 1V_{rms}$, $R_L = 1k\Omega$, f = 1kHz	180	400		I	180	400		II	kΩ
R_{out}	Output Impedance	$R_L = 50\Omega$, $V_{in} = 1V_{rms}$, $R_S = 10k\Omega$, f = 1kHz		6	10	I		6	10	II	Ω
HD	Harmonic Distortion	$V_{in} = 5V_{rms}$, f = 1kHz		0.1		V		0.1		V	%
t_r	Rise Time	$R_L = 50\Omega$, $\Delta V_{IN} = 100mV$		7	12	III		7	12	III	ns

Typical Performance Curves

Maximum Power Dissipation

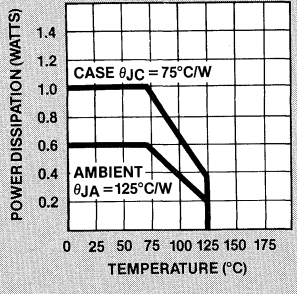

Frequency Response

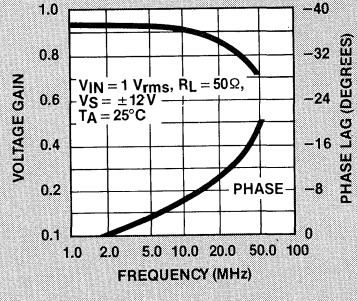

Input Impedance (Magnitude & Phase)

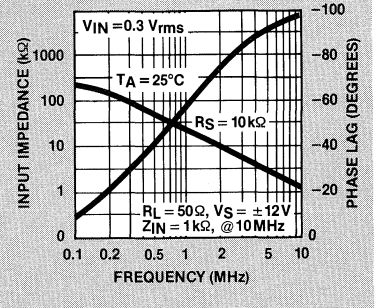

Supply Current

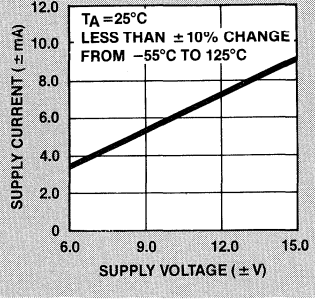

Positive Pulse

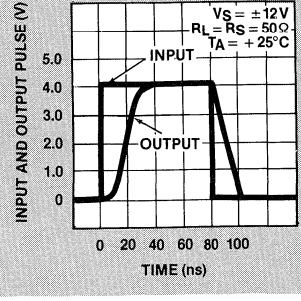

Negative Pulse

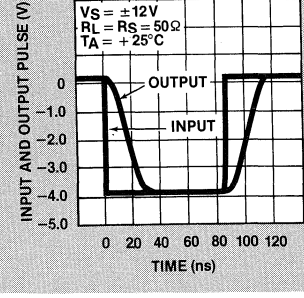

ELH0002/ELH0002C
Current Amplifier

Typical Performance Curves
Continued

Input Current

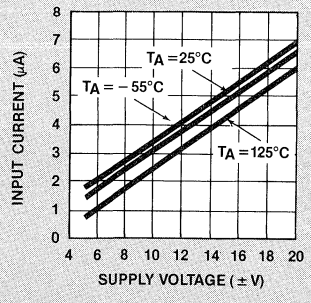

Burn-In Circuit

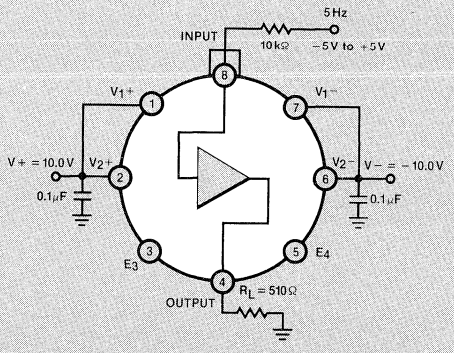

Typical Applications

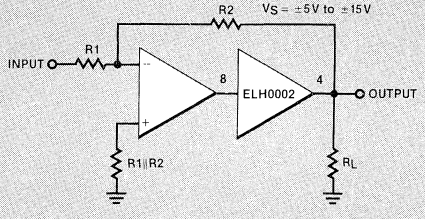

High Current Operational Amplifier

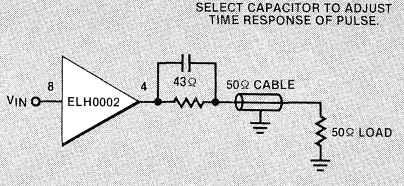

Line Driver

élantec
HIGH PERFORMANCE ANALOG INTEGRATED CIRCUITS

ELH0033/ELH0033C

Fast Buffer Amplifier

See the EL2004 and EL2005 For New Designs

Features

- Slew rate—1500 V/μs
- Output drive—100 mA
- Rise and fall times—2.9 ns
- Input resistance—$10^{11}\Omega$
- Power bandwidth—100 MHz
- MIL-STD-883 devices 100% manufactured in U.S.A.

Advantages

- Excellent phase linearity
- Driver cables and other capacitive loads
- Wide supply range, single or split

Ordering Information

Part No.	Temp. Range	Pkg.	Outline#
ELH0033CG	−25 to +85°C	TO-8	MDP0002
ELH0033CG/E+	−25 to +85°C	TO-8	MDP0002
ELH0033G	−55 to +125°C	TO-8	MDP0002
ELH0033G/883	−55 to +125°C	TO-8	MDP0002

General Description

The ELH0033 is a high-speed, FET input voltage follower/buffer designed to provide high output current from DC to over 100 MHz. The ELH0033 slews at 1500 V/μs and will drive 100Ω loads. Phase linearity is excellent to 20 MHz, allowing the buffer to be included in op amp loops.

The ELH0033 is intended to fulfill a wide range of buffer applications such as high-speed line drivers, video impedance transformation, nuclear instrumentation amplifiers, op amp isolation buffers for driving reactive loads and high impedance input buffers for high-speed A to D's and comparators.

These devices are constructed using specially selected junction FETs and active laser trimming to achieve guaranteed performance specifications. The ELH0033 is specified for operation from −55°C to +125°C; the ELH0033C is specified from −25°C to +85°C. The ELH0033 and ELH0033C are available in a 1.5 W metal TO-8 package.

Elantec facilities comply with MIL-I-45208A and other applicable quality specifications. Elantec's Military devices are 100% fabricated and assembled in our rigidly controlled, ultra-clean facilities in Milpitas, California. For additional information on Elantec's Quality and Reliability Assurance policy and procedures request brochure QRA-1.

Connection Diagram

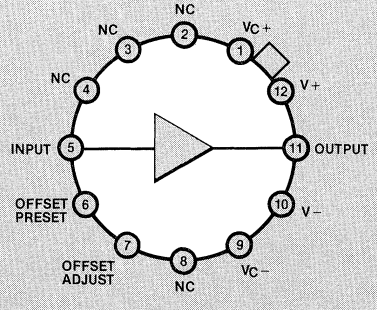

Note: Case is electrically isolated.

TOP VIEW

Equivalent Schematic

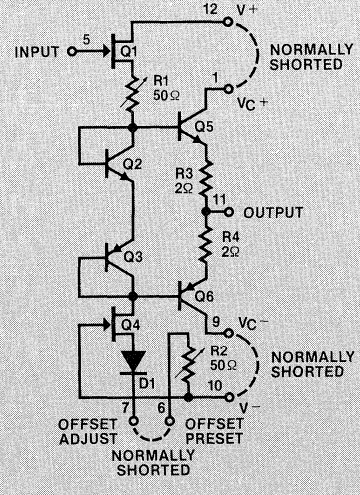

ELH0033/ELH0033C

Fast Buffer Amplifier

Absolute Maximum Ratings

V_S	Supply Voltage (V+ – V–)	40 V	T_A	Operating Temperature Range:	
V_{IN}	Input Voltage	40 V		ELH0033	–55°C to +125°C
P_D	Power Dissipation (See curves)	1.5 W		ELH0033C	–25°C to +85°C
I_{OC}	Continous Output Current	±100 mA	T_J	Operating Junction Temperature	175°C
I_{OP}	Peak Output Current	±250 mA	T_{ST}	Storage Temperature	–65°C to +150°C
				Lead Temperature (soldering, 10 seconds)	300°C

Important Note: **All parameters having Min./Max. specifications are guaranteed. The Test Level column indicates the specific device testing actually performed during production and Quality Assurance inspection. Elantec performs most electrical tests using modern high-speed automatic test equipment, specifically the LTX 77 Series system. Unless otherwise noted, all tests are pulsed tests, therefore $T_J = T_C = T_A$.**

Test Level **Test Procedure**

I 100% production tested and QA sample tested per QA test plan QCX0002.

II 100% production tested at $T_A = 25°C$, and QA sample tested at $T_A = 25°C$, T_{MAX} and T_{MIN} per QA test plan QCX0002.

III QA sample tested per QA test plan QCX0002.

IV Parameter is guaranteed (but not tested) by Design and Characterization Data.

V Parameter is typical value for information purposes only.

DC Electrical Characteristics

$V_S = \pm 15\,V$, $V_{IN} = 0\,V$, $T_{MIN} \leq T_A \leq T_{MAX}$

	Parameter	Test Conditions	ELH0033				ELH0033C				Units
			Min.	Typ.	Max.	Test Level	Min.	Typ.	Max.	Test Level	
V_{OS}	Output Offset Voltage	$R_S \leq 100\,k\Omega$, $T_J = 25°C$ (Note 1)		5	10	I		12	20	I	mV
		$R_S \leq 100\,k\Omega$			15	I			25	III	mV
$\Delta V_{OS}/\Delta T$	Average Temperature Coefficient of Offset Voltage	$R_S = 100\,\Omega$		50		V		50		V	µV/°C
I_B	Input Bias Current	$T_J = 25°C$ (Note 1)			250	I			500	I	pA
		$T_A = 25°C$ (Note 2)			2.5	IV			5	IV	nA
		$T_J = T_A = T_{MAX}$			10	I			20	III	nA
A_V	Voltage Gain	$R_S = 100\,\Omega$, $R_L = 1\,k\Omega$, $V_{IN} = \pm 10\,V$	0.97	0.98	1.00	I	0.96	0.98	1.00	II	V/V
R_{IN}	Input Impedance	$R_L = 1\,k\Omega$	10^{10}	10^{11}		IV	10^{10}	10^{11}		IV	Ω
		$T_J = 25°C$ (Note 1), $R_L = 1\,k\Omega$	10^{10}	10^{11}		I	10^{10}	10^{11}		I	Ω
R_O	Output Impedance	$R_L = 1\,k\Omega$, $V_{IN} = \pm 1\,V$		6	10	I		6	10	II	Ω
V_O	Output Voltage Swing	$V_{IN} = \pm 14\,V$, $R_L = 1\,k\Omega$	±12			I	±12			II	V
		$V_{IN} = \pm 10.5\,V$, $R_L = 100\,\Omega$, $T_A = 25°C$	±9			I	±9			I	V
I_S	Supply Current		14.5	20	22	I		21	24	II	mA
	Power Consumption			600	660	I		630	720	II	mW

Note 1: Specification is at 25°C junction temperature due to requirements of high-speed automatic testing. Actual values at operating temperature will exceed the value at $T_J = 25°C$. When supply voltages are ±15 V, no-load operating junction temperature may rise 40-60°C above ambient and more under load conditions. Accordingly, V_{OS} may change one to several mV, and I_B will change significantly during warm-up. Refer to I_B vs. temperature graph for expected values.

Note 2: Measured in still air 7 minutes after application of power.

ELH0033/ELH0033C

Fast Buffer Amplifier

AC Electrical Characteristics

T_C=25°C, V_S=±15V, R_S=50Ω, R_L=1kΩ

	Parameter	Test Conditions	ELH0033				ELH0033C				Units
			Min.	Typ.	Max.	Test Level	Min.	Typ.	Max.	Test Level	
S_r	Slew Rate	V_{IN}=±10V	1000	1500		III	1000	1400		III	V/μs
BW	Bandwidth	V_{in}=1V_{rms}		100		V		100		V	MHz
	Phase Non-Linearity	BW=1 to 20MHz		2		V		2		V	Degree
t_r	Rise Time	ΔV_{IN}=0.5V		2.9		V		3.2		V	ns
t_p	Propagation Delay	ΔV_{IN}=0.5V		1.2		V		1.5		V	ns
HD	Harmonic Distortion	f>1kHz		<0.1		V		<0.1		V	%
A_v	Voltage Gain	R_S=100Ω, V_{in}=1V_{rms}, f=1kHz	0.97	0.98	1.00	I	0.96	0.98	1.00	II	V/V
R_o	Output Impedance	V_{in}=1V_{rms}, f=1kHz		6	10	I		6	10	II	Ω

Typical Performance Curves

Power Dissipation

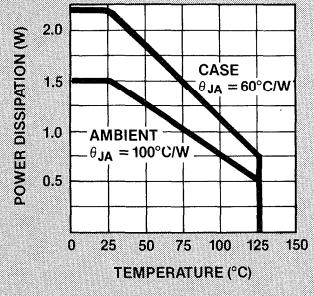

Supply Current vs Supply Voltage

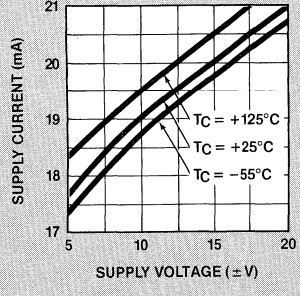

Output Voltage vs Supply Voltage

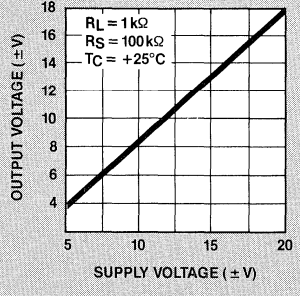

Negative Pulse Response

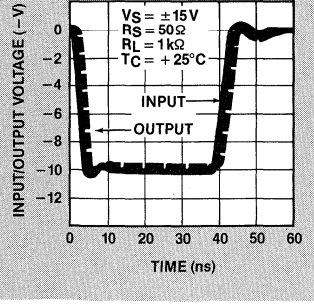

Positive Pulse Response

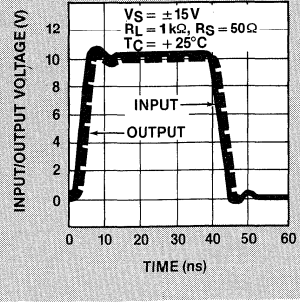

Frequency Response

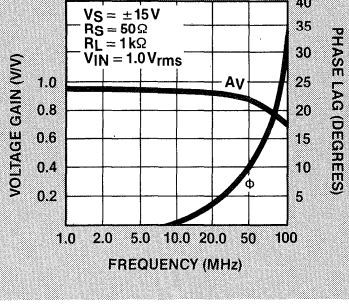

Typical Performance Curves—Continued

Rise and Fall Time vs Temperature

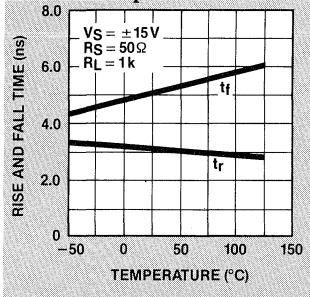

Input Bias Current vs Temperature

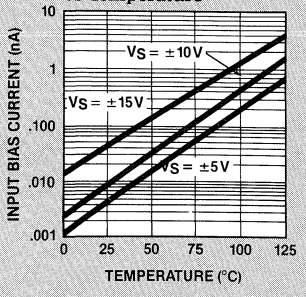

Normalized Input Bias Current During Warm-up

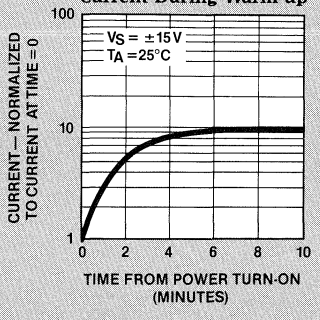

Input Bias Current vs Input Voltage

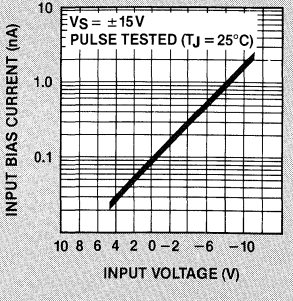

Typical Applications

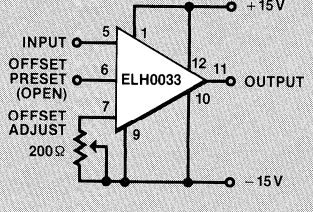

Offset Zero Adjust

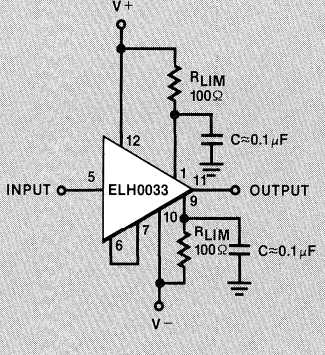

Using Resistor Current Limiting

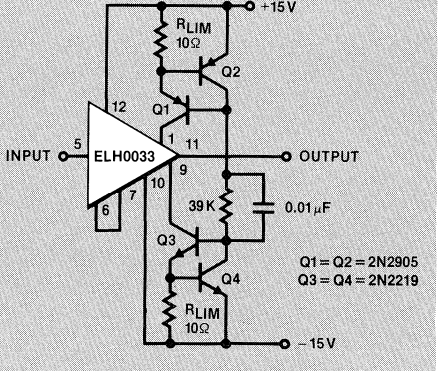

Current Limiting Using Current Sources

ELH0033/ELH0033C
Fast Buffer Amplifier

Typical Applications—Continued

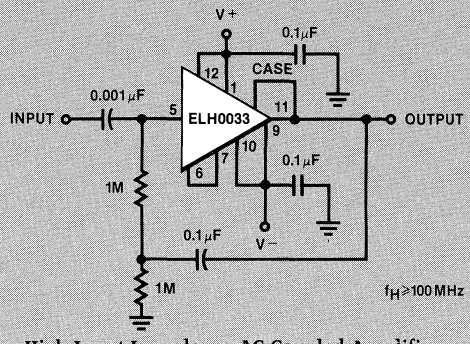

High Input Impedance AC Coupled Amplifier

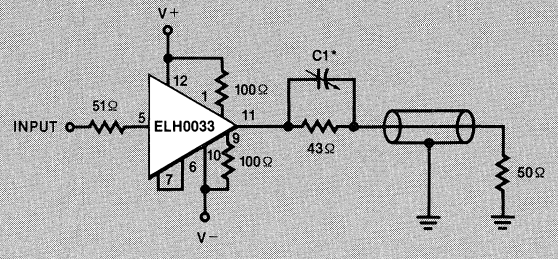

*SELECT C1 FOR OPTIMUM PULSE RESPONSE

Coaxial Cable Driver

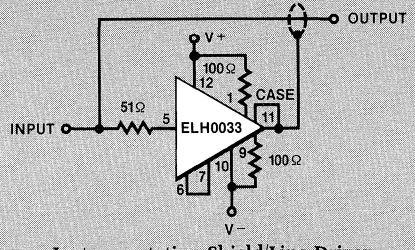

Instrumentation Shield/Line Driver

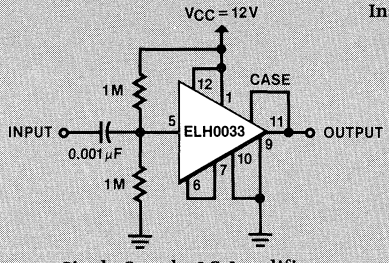

Single Supply AC Amplifier

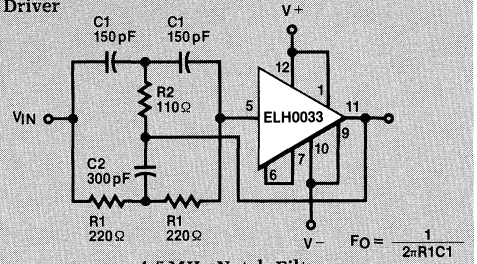

4.5MHz Notch Filter

$FO = \frac{1}{2\pi R1C1}$

R1 = 2 R2

$C1 = \frac{C2}{2}$

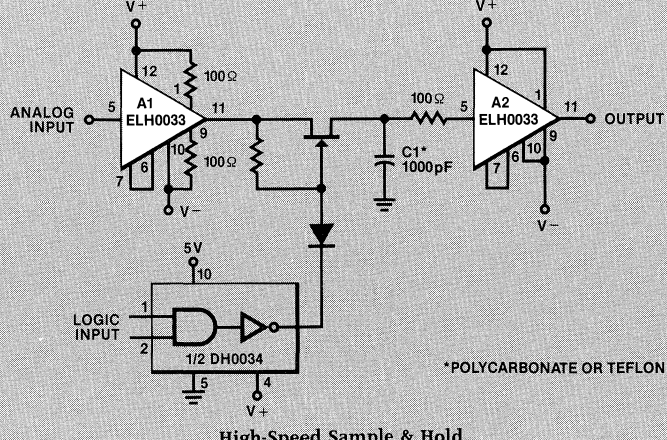

*POLYCARBONATE OR TEFLON

High-Speed Sample & Hold

Applications Information

Recommended Layout Precautions

RF/video printed circuit board layout rules should be followed when using the ELH0033 since it will provide power gain to frequencies over 100 MHz. Ground planes are recommended and power supplies should be decoupled at each device with low inductance capacitors. In addition, ground plane shielding may be extended to the metal case of the device since it is electrically isolated from internal circuitry. Alternatively, the case should be connected to the output to minimize input capacitance.

Offset Voltage Adjustment

The ELH0033's offset voltages have been actively trimmed by laser to meet guaranteed specifications when the offset preset pin is shorted to the offset adjust pin. The pre-calibration allows the devices to be used in most DC or AC applications without individually offset nulling each device. If offset null is desirable, it is simply obtained by leaving the offset preset pin open and connecting a trim pot of 100Ω between the offset adjust pin and V^- as illustrated in Figure 1.

Operation from Single or Asymmetrical Power Supplies

This device type may be readily used in applications where symmetrical supplies are unavailable or not desirable. A typical application might be an interface to a MOS shift register where $V^+ = +5V$ and $V^- = -12V$. In this case, an apparent output offset occurs due to the device's voltage gain of less than unity. This additional output offset error may be predicted by:

$$\Delta V_O \cong (1 - A_V)\frac{(V^+ - V^-)}{2} = 0.005\,(V^+ - V^-)$$

where: A_V = No load voltage gain, typically 0.99
V^+ = Positive supply voltage
V^- = Negative supply voltage

For the above example, ΔV_O would be −35 mV. This may be adjusted to zero as described in Section 2. For AC coupled applications, no additional offset occurs if the DC input is properly biased as illustrated in the "typical applications" section.

Short Circuit Protection

In order to optimize transient response and output swing, output current limit has been omitted from the ELH0033. Short circuit protection may be added by inserting appropriate value resistors between V^+ and V_C^+ pins and V^- and V_C^- pins as illustrated in Figure 2. Resistor values may be predicted by:

$$R_{LIM} \cong \frac{V^+}{I_{SC}} = \frac{V^-}{I_{SC}}$$

where: $I_{SC} \leq 100$ mA for ELH0033

The inclusion of limiting resistors in the collectors of the output transistors reduces output voltage swing. Decoupling V_C^+ and V_C^- pins with capacitors to ground will retain full output swing for transient pulses. An alternate active current limit technique that retains full DC output swing is shown in Figure 3. In Figure 3, the current sources are saturated during normal operation thus applying full supply voltage to the V_C pins. Under fault conditions, the voltage decreases as requried by the overload.

$$R_{LIM} \cong \frac{V_{BE}}{I_{SC}} = \frac{0.6V}{60mA} = 10\Omega$$

Capacitive Loading

The ELH0033 is designed to drive capacitive loads such as coaxial cables in excess of several thousand picofarads without susceptibility to oscillation. However, peak current resulting from $(C \times d_V/d_t)$ should be limited below absolute maximum peak current ratings for the devices.

Thus:

$$\frac{\Delta V_{IN}}{\Delta t} \times C_L \leq I_{OUT} \leq \pm 250\,mA$$

In addition, power dissipation resulting from driving capacitative loads plus standby power should be kept below the total package power rating:

$$P_D pkg \geq P_{DC} + P_{AC}$$
$$P_D pkg \geq (V^+ - V^-) \times I_S + P_{AC}$$
$$P_{AC} \cong (V_{P\text{-}P})^2 \times f \times C_L$$

where: $V_{P\text{-}P}$ = Peak-to-peak output voltage swing
f = Frequency
C_L = Load Capacitance

Operation Within an Op Amp Loop

Both devices may be used as a current booster or isolation buffer within a closed loop with op amps such as the ELH0032 and HA2500 and HA2600 series. An isolation resistor of 47Ω should be used between the op amp output and the input of ELH0033. The wide bandwidth and high slew rates of the ELH0033 assure that the loop has the characteristics of the op amp and that additional rolloff is not required.

ELH0033/ELH0033C
Fast Buffer Amplifier

Burn-In Circuit

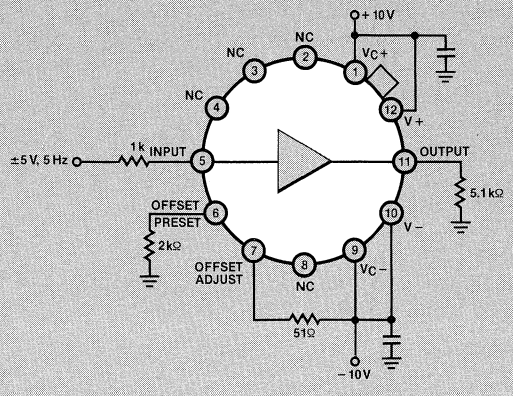

Hardware

In order to utilize the full drive capabilities of the ELH0033, it should be mounted with a heatsink, particularly for extended temperature operation. The case is isolated from the circuit and may be connected to system chassis.

IMPORTANT!

Power supply bypassing is necessary to prevent oscillation with the ELH0033 in all circuits. Low inductance ceramic disc capacitors with the shortest practical lead lengths must be connected from each supply lead (within < ¼" to ½" of the device package) to a ground plane. Capacitors should be one or two 0.1 μF in parallel; adding a 4.7 μF solid tantalum capacitor will help in troublesome instances.

élantec
HIGH PERFORMANCE ANALOG INTEGRATED CIRCUITS

EL2003/2003C/2033C

100 MHz Video Line Driver

Features

- Differential Gain 0.1%
- Differential Phase 0.1°
- 100 mA continuous output current guaranteed
- Short circuit protected
- Wide bandwidth—100 MHz
- High slew rate—1200 V/μs
- High input impedance—2 MΩ
- Low quiescent current drain
- EL2003—Pin compatible with LH0002CN and LH0002H
- EL2033C—Pin compatible with HA3-5033-5 and HA3-5002-5

Applications

- Co-ax cable driver
- Flash converter driver
- Video DAC buffer
- Op amp booster

Ordering Information

Part No.	Temp. Range	Pkg.	Outline#
EL2003CJ	−25 to +85°C	Cerdip	MDP0010
EL2003CJ/E+	−25 to +85°C	Cerdip	MDP0010
EL2003CN	−25 to +85°C	P-DIP	MDP0006
EL2003CN/E+	−25 to +85°C	P-DIP	MDP0006
EL2003CH	−25 to +85°C	TO-99	MDP0004
EL2003CH/E+	−25 to +85°C	TO-99	MDP0004
EL2003H	−55 to +125°C	TO-99	MDP0004
EL2003H-8	−55 to +125°C	TO-99	MDP0004
EL2003J	−55 to +125°C	Cerdip	MDP0010
EL2003J-8	−55 to +125°C	Cerdip	MDP0010
EL2033CN	−25 to +85°C	P-DIP	MDP0006

General Description

The EL2003/EL2033C are general purpose monolithic unity gain buffers featuring 100 MHz, −3 dB bandwidth and 4 ns small signal rise time. These buffers are capable of delivering a ±100 mA current to a resistive load and are oscillation free into capacitive loads. In addition, the EL2003/EL2033C have internal output short circuit current limiting which will protect the devices under both a DC fault condition and AC operation with reactive loads. The extremely fast slew rate of 1200 V/μs, wide bandwidth, and high output drive make the EL2003/EL2033C ideal choices for closed loop buffer applications with wide band op amps. These same characteristics and excellent DC performance make the EL2003/EL2033C excellent choices for open loop applications such as driving coaxial and twisted pair cables.

The EL2003/EL2033C are constructed using Elantec's proprietary dielectric isolation process that produces PNP and NPN transistors with essentially identical AC and DC characteristics.

The EL2003 is specified for operation over the −55°C to +125°C military temperature range and is available in the 8-lead TO-99 hermetic package. The EL2003C/EL2033C are specified for operation over the −25°C to +85°C temperature range and are available in TO-99, 8-lead plastic mini-DIP and 8-lead cerdip packages.

Elantec facilities comply with MIL-I-45208A and other applicable quality specifications. For information on Elantec's military processing, request our brochure: *Elantec's Military Processing—Monolithic Products.*

Connection Diagrams

EL2003 H-PACKAGE

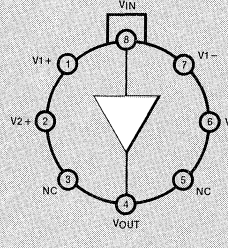

EL2003 N, J PACKAGES

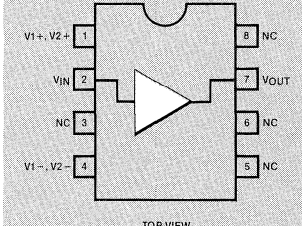

TOP VIEW

EL2033C N-PACKAGE

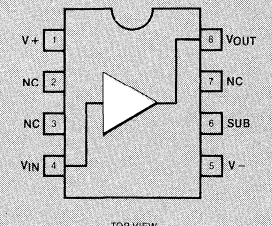

TOP VIEW

EL2003/2003C/2033C

100 MHz Video Line Driver

Absolute Maximum Ratings

V_S	Supply Voltage (V^+–V^-)	±18 V or 36 V	T_J	Operating Junction Temperature	
V_{IN}	Input Voltage (Note 1)	±15 V or V_S		Metal Can Package	+175°C
I_{IN}	Input Current (Note 1)	±50 mA		Plastic DIP	+150°C
P_D	Power Dissipation (Note 2)	See Curves	T_{ST}	Storage Temperature	–65°C to +150°C
	Output Short Circuit			Lead Temperature	
	Duration (Note 3)	Continuous		(soldering, <10 seconds)	+300°C
T_A	Operating Temperature Range:				
	EL2003	–55°C to +125°C			
	EL2003C/2033C	–25°C to +85°C			

Important Note: **All parameters having Min./Max. specifications are guaranteed. The Test Level column indicates the specific device testing actually performed during production and Quality Assurance inspection. Elantec performs most electrical tests using modern high-speed automatic test equipment, specifically the LTX 77 Series system. Unless otherwise noted, all tests are pulsed tests, therefore $T_J = T_C = T_A$.**

Test Level **Test Procedure**

I 100% production tested and QA sample tested per QA test plan QCX0002.

II 100% production tested at $T_A = 25°C$, and QA sample tested at $T_A = 25°C$, T_{MAX} and T_{MIN} per QA test plan QCX0002.

III QA sample tested per QA test plan QCX0002.

IV Parameter is guaranteed (but not tested) by Design and Characterization Data.

V Parameter is typical value for information purposes only.

Electrical Characteristics $V_S = \pm 15$ V, $R_S = 50\Omega$

	Parameter	Test Conditions			Limits			Test Level		Units
		V_{in}	Load	Temp	Min.	Typ.	Max.	2003	2003C 2033C	
V_{OS}	Output Offset Voltage	0	∞	25°C	–40	5	+40	I	I	mV
				T_{min}, T_{max}	–50		+50	I	III	mV
I_{in}	Input Current	0	∞	25°C, T_{max}	–25	–5	+25	I	II	μA
				T_{min}	–50		+50	I	III	μA
R_{in}	Input Resistance	±12 V	100Ω	25°C, T_{max}	1	2		I	II	MΩ
				T_{min}	0.1			I	III	MΩ
A_{v1}	Voltage Gain	±12 V	1kΩ	25°C	0.98	0.99		I	I	V/V
				T_{min}, T_{max}	0.97			I	III	V/V
A_{v2}	Voltage Gain	±6 V	50Ω	25°C	0.83	0.90		I	I	V/V
				T_{min}, T_{max}	0.80			I	III	V/V
A_{v3}	Voltage Gain with $V_S = \pm 5$ V	±3 V	50Ω	25°C	0.82	0.89		I	I	V/V
				T_{min}, T_{max}	0.79			I	III	V/V
V_{O1}	Output Voltage Swing	±14 V	1kΩ	25°C	±13	±13.5		I	I	V
				T_{min}, T_{max}	±12.5			I	III	V
V_{O2}	Output Voltage Swing	±12 V	100Ω	25°C	±10.5	±11.3		I	I	V
				T_{min}, T_{max}	±10			I	III	V

Electrical Characteristics $V_S = \pm 15V$, $R_S = 50\Omega$ —(Continued)

	Parameter	Test Conditions			Limits			Test Level		Units
		V_{in}	Load	Temp	Min.	Typ.	Max.	2003	2003C 2033C	
R_{OUT}	Output Resistance	±2V	50Ω	25°C		7	10	I	I	Ω
				T_{min}, T_{max}			12	I	III	Ω
I_{OUT}	Output Current	±12V	Note 4	25°C	±105	±230		I	I	mA
				T_{min}, T_{max}	±100			I	III	mA
I_S	Supply Current	0	∞	25°C, T_{max}		10	15	I	II	mA
				T_{min}			20	I	III	mA
PSRR	Supply Rejection, Note 5	0	∞	25°C	60	80		I	I	dB
				T_{min}, T_{max}	50			I	III	dB
SR1	Slew Rate, Note 6	±10V	1kΩ	25°C	600	1200		I	I	V/μs
SR2	Slew Rate, Note 7	±5V	50Ω	25°C	200	400		I	I	V/μs
THD	Distortion @1kHz	4 V_{rms}	50Ω	25°C		0.2	1	I	I	%

Note 1: If the input exceeds the ratings shown (or the supplies) or if the input to output voltage exceeds ±7.5V then the input current must be limited to ±50mA. See the application hints for more information.

Note 2: The maximum power dissipation depends on package type, ambient temperature and heat sinking. For the metal can package the maximum junction temperature is 175°C and the thermal resistance junction to case is 45°C/W and the junction to ambient is 150°C/W. The plastic DIP and Cerdip are rated at 150°C maximum junction temperature with a junction to case of 50°C/W and a junction to ambient of 100°C/W. See the characteristic curves for more details.

Note 3: A heat sink is required to keep the junction temperature below the absolute maximum when the output is short circuited.

Note 4: Force the input to +12V and the output to +10V and measure the output current. Repeat with −12V in and −10V on the output.

Note 5: $V_S = \pm 4.5V$ to ±18V

Note 6: Slew rate is measured between $V_{OUT} = +5V$ and −5V.

Note 7: Slew rate is measured between $V_{OUT} = +2.5V$ and −2.5V.

Typical Performance Curves

Metal Can and Cerdip Packages Maximum Power Dissipation vs. Ambient Temperature

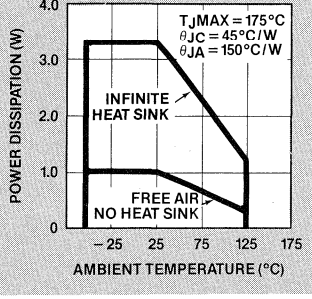

Plastic DIP Package Maximum Power Dissipation vs. Ambient Temperature

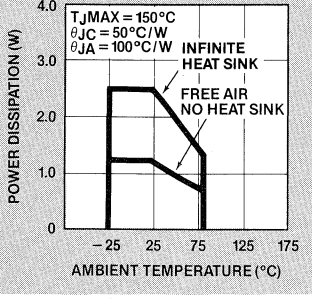

Current Limit vs. Temperature

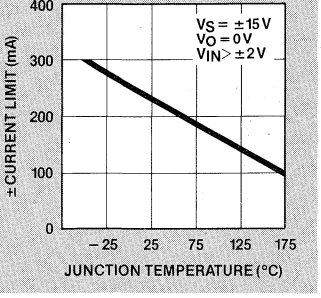

EL2003/2003C/2033C

100 MHz Video Line Driver

Typical Performance Curves — Continued

Quiescent Supply Current vs. Supply Voltage

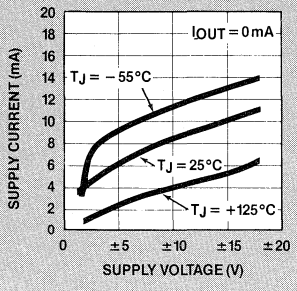

Input Current vs. Supply Voltage

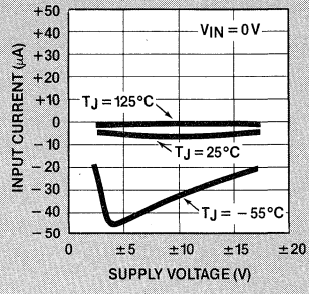

Input Resistance vs. Temperature

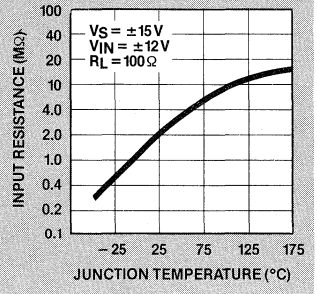

Voltage Gain vs. Frequency Various Resistive Loads

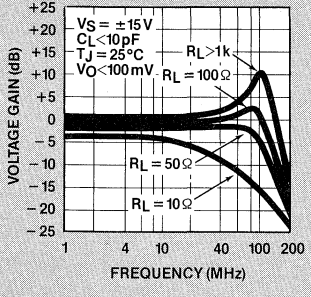

Voltage Gain vs. Frequency No Resistive Load Various Capacitive Loads

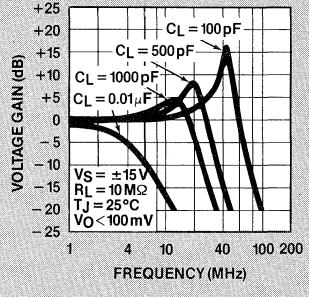

Voltage Gain vs. Frequency 50 Ω Resistive Load Various Capacitive Loads

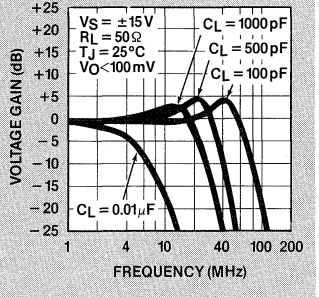

Phase Shift vs. Frequency Various Resistive Loads

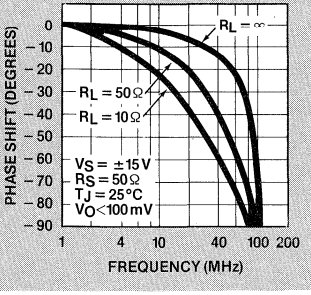

Phase Shift vs. Frequency Various Source Resistors

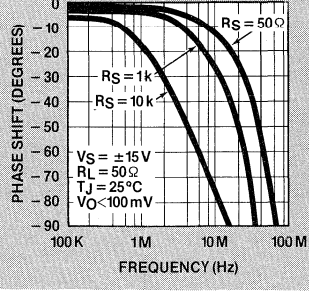

−3 dB Bandwidth vs. Supply Voltage

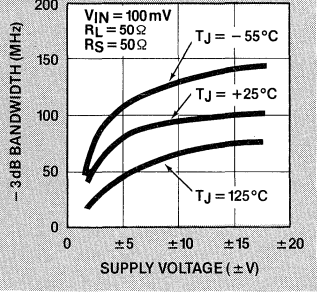

Typical Performance Curves—Continued

Maximum Undistorted Output Voltage vs. Frequency

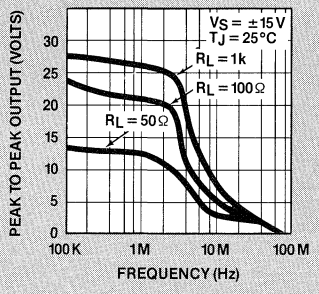

Power Supply Rejection Ratio vs. Frequency

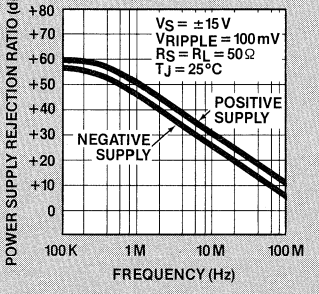

Rise Time vs. Temperature

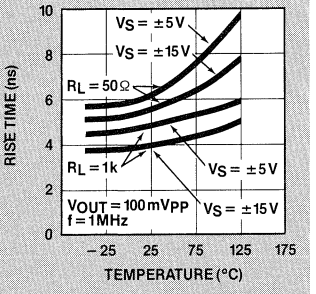

Slew Rate vs. Supply Voltage

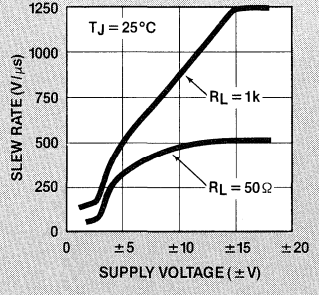

Slew Rate vs. Temperature

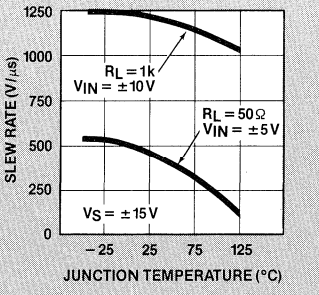

Slew Rate vs. Capacitive Load

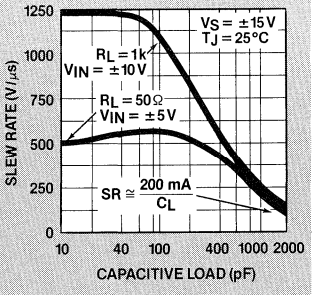

Output Resistance vs. Supply Voltage

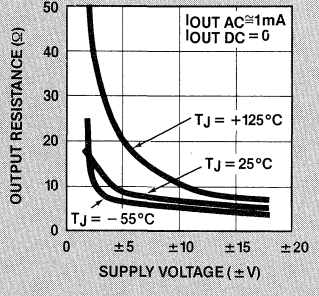

Small Signal Output Resistance vs. DC Output Current

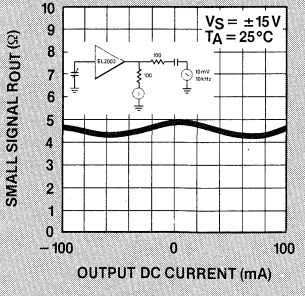

Output Impedance vs. Frequency

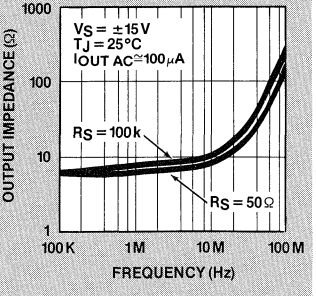

EL2003/2003C/2033C

100 MHz Video Line Driver

Applications Hints

The EL2003/EL2033C are monolithic buffer amplifiers built with Elantec's proprietary dielectric isolation process that produces NPN and PNP complimentary transistors. The circuits are connection of symmetrical common collector transistors that provide both sink and source current capability independent of output voltage while maintaining constant output and input impedances. The high slew rate and wide bandwidth of the EL2003 and EL2033C make them useful beyond video frequencies.

Power Supplies

The EL2003/EL2033C may be operated with single or split supplies as low as ±2.5V (5V total) to as high as ±18V (36V total). However the bandwidth, slew rate and output impedance degrade significantly for supply voltages less than ±5V (10V total) as shown in the characteristic curves. It is not necessary to use equal value split supplies, for example −5V and +12V would be excellent for 0 to 1V video signals.

Bypass capacitors from each supply pin to a ground plane are recommended. The EL2003/EL2033C will not oscillate even with minimal bypassing, however the supply will ring excessively with inadequate capacitance. To eliminate supply ringing and the interference it can cause, a 10μF tantalum capacitor with short leads is recommended for both supplies. Inadequate supply bypassing can also result in lower slew rates and longer settling times.

The EL2003 metal can package has the collectors of the output transistors brought out separately from the input supplies for pin compatability with the ELH0002H. If the collectors operate on lower supplies than the input stage, the internal power dissipation can be reduced. However, the output transistors can be driven into hard saturation when the input voltage exceeds the collector supply voltage. The recovery time to come out of saturation will be 2 or 3μs and the output may oscillate during this recovery period.

Input Range

The input to the EL2003/EL2033C looks like a high resistance in parallel with a few picofarads in addition to a DC bias current. The input characteristics change very little with output loading, even when the amplifier is in current limit. However there are clamp diodes from the input to the output that protect the transistor base emitter junctions. These diodes start to conduct at about ±9.5V input to output differential voltage. Of course the input resistance drops dramatically when the diodes start conducting; the diodes are rated at ±50mA.

The input characteristics also change when the input voltage exceeds either supply by 0.5V. This happens because the input transistor's base-collector junctions forward bias. If the input exceeds the supply by LESS than 0.5V and then returns to the normal input range, the output will recover in less than 10ns. However if the input exceeds the supply by MORE than 0.5V, the recovery time can be 100's of nanoseconds. For this reason it is recommended that Schottky diode clamps from input to supply be used if a fast recovery from large input overloads is required.

Source Impedance

The EL2003/EL2033C have excellent input-output isolation and are very tolerant of variations in source impedances. Capacitive sources cause no problems at all, resistive sources up to 100kΩ present no problems as long as care is used in board layout to minimize output to input coupling. Inductive sources can cause oscillations; a 1kΩ resistor in series with the buffer input lead will usually eliminate problems without sacrificing too much speed. An unterminated cable or other resonant source can also cause oscillations. Again, an isolating resistor will eliminate the problem.

Current Limit

The EL2003/EL2033C have internal current limits that protect the output transistors. The current limit goes down with junction temperature rise as shown in the characteristic curves. At a junction temperature of +175°C the current limits are at about 100mA. If the EL2003 or EL2033C output is shorted to ground when operating on ±15V supplies, the power dissipation will be greater than 1.5W. A heat sink is required in order for the EL2003 or EL2033C to survive an indefinite short. Recovery time to come out of current limit is about 250ns.

Heat Sinking

When operating the EL2003/EL2033C in elevated ambient temperatures and/or high supply voltages and low impedance loads, the internal power dissipation can force the junction temperature above the maximum rating (175°C for the metal can package and 150°C for the plastic DIP). Also, an indefinite short of the output to ground will cause excessive power dissipation.

The thermal resistance junction to case is 45°C per Watt for the metal can package and 50°C/W for the plastic DIP. A suitable heat sink will increase the power dissipation capability significantly beyond that of the package alone. Several companies make

Applications Hints—Continued

standard heat sinks for both packages. Aavid and Thermalloy heat sinks have been used successfully.

Parallel Operation

If more than 100 mA output is required or if heat management is a problem, several EL2003s or EL2033Cs may be paralleled together. The result is as though each device was driving only part of the load. For example, if two units are paralleled then a 50Ω load looks like 100Ω to each EL2003. Parallel operation results in lower input and output impedances, increased bias current but no increase in offset voltage. An example showing three EL2003s in parallel and also the addition of a FET input buffer stage is shown below. By using a dual FET the circuit complexity is minimal and the performance is excellent. Take care to minimize the stray capacitance at the input of the EL2003s for maximum slew rate and bandwidth.

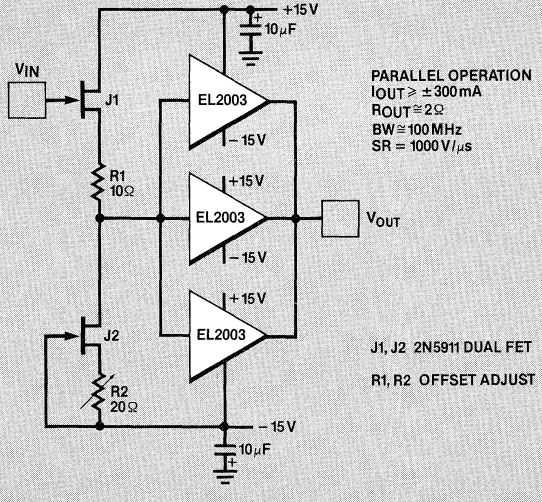

Fet Input Buffer with High Output Currents

Resistive Loads

The DC gain of the EL2003/EL2033C is the product of the unloaded gain (0.995) and the voltage divider formed by the device output resistance and the load resistance.

$$A_V = 0.995 * R_L/(R_L + R_{OUT})$$

The high frequency response of the EL2003/EL2033C varies with the value of the load resistance as shown in the characteristic curves. If the 100 MHz peaking is undesirable when driving load resistors greater than 50Ω, an RC snubber circuit can be used from the output to ground. The snubber circuit works by presenting a high frequency load resistance of less than 50Ω while having no loading effect at low frequencies.

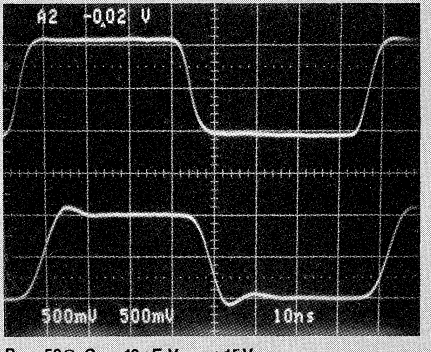

$R_L = 50\Omega$, $C_L = 10pF$, $V_S = \pm 15V$
Top is V_{IN}, Bottom is V_{OUT}

Small Signal Response

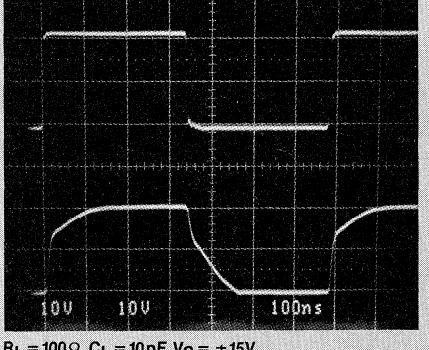

$R_L = 100\Omega$, $C_L = 10pF$, $V_S = \pm 15V$
Top is V_{IN}, Bottom is V_{OUT}

Large Signal Response

Applications Hints—Continued

Capacitive Loads

The EL2003/EL2033C are stable driving any type of capacitive load. However when driving a pure capacitance of less than a thousand picofarads the frequency response has excessive peaking as shown in the characteristic curves. The squarewave response will have large overshoots and will ring for several hundred ns.

If the peaking and ringing cause system problems they can be eliminated with an RC snubber circuit from the output to ground. The values can be found empirically by observing a squarewave or the frequency response. First just put the resistor alone from output to ground until the desired response is obtained. Of course the gain will be reduced due to R_{OUT}. Then put capacitance in series with the resistor to restore the gain at low frequencies. Start with a small capacitor and increase until the response is optimum too large a capacitor will roll the gain off prematurely and result in a longer settling time. The figure below shows an example of an EL2003 driving a 330pF load, which is similar to the input of a flash converter.

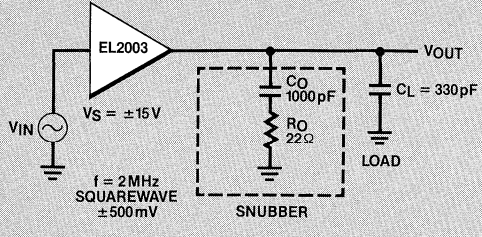

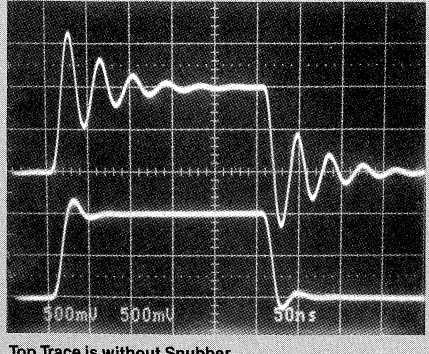

Top Trace is without Snubber.
Bottom Trace is with Snubber Circuit.

Driving a Pure Capacitance

Inductive Loads

The EL2003/EL2033C can drive small motors, solenoids, LDT's and other inductive loads. Foldback current limiting is NOT used in the EL2003 or EL2033C and current limiting into an inductive load does NOT in and of itself cause spikes or kickbacks. However, if the EL2003 or EL2033C is in current limit and the input voltage is changing quickly (i.e. a squarewave) the inductive load can kick the output beyond the supply voltage. Motors are also able to generate kickbacks when the EL2003 or EL2033C is in current limit.

To prevent damage to the EL2003/EL2033C when the output kicks beyond the supplies it is recommended that catch diodes be placed from each supply to the output.

Reverse Isolation

The EL2003/EL2033C have excellent output to input isolation over a wide frequency range. This characteristic is very important when the buffer is used to drive signals between different equipment over cables. Often the cable is not perfect or the termination is improper and reflections occur that act like a signal source at the output of the buffer. Worst case the cable is connected to a source instead of where it is supposed to go. In both situations the buffer must keep these signals from its input. The following curve shows the reverse isolation of the EL2003/EL2033C verses frequency for various source resistors.

Reverse Isolation vs. Frequency

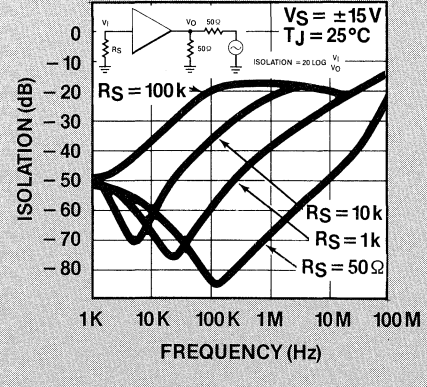

Applications Hints—Continued

Driving Cables

There are at least three ways to use the EL2003 and EL2033C to drive cables, as shown in the adjacent figure. The most obvious is to directly connect the cable to the output of the buffer. This results in a gain determined by the output resistance of the EL2003 or EL2033C and the characteristic impedance of the cable, assuming it is properly terminated. For RG–58 into 50Ω the gain is about −1dB, exclusive of cable losses. For optimum response and minimum reflections it is important for the cable to be properly terminated.

Double termination of a cable is the cleanest way to drive it since reflections are absorbed on both ends of the cable. The cable source resistor is equal to the characteristic impedance of the cable less the output resistance of the EL2003/EL2033C. The gain is −6dB exclusive of the cable attenuation.

Back matching is the last and most interesting way to drive a cable. The cable source resistor is again the characteristic impedance less the output resistance of the EL2003/EL2033C; the termination resistance is now much greater than the cable impedance. The gain is 0dB and DC levels waste no power.

An additional EL2003 or EL2033C make a good receiver at the terminating end. Because an unterminated cable looks like a resonant circuit, the receiving EL2003 or EL2033C should have an isolating resistor in series with its input to prevent oscillations when the cable is not connected to the driver. Of course if the cable is always connected to the back match, no resistor is necessary.

WARNING: ONE END OF A CABLE MUST BE PROPERLY TERMINATED. If neither end is terminated in the cable characteristic impedance, the cable will have standing waves that appear as resonances in the frequency response. The resonant frequencies are a function of the cable length and even relatively short cables can cause problems at frequencies as low as 1MHz. Longer cables should be terminated on both ends.

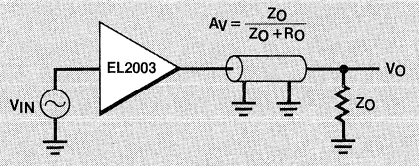

Direct Drive

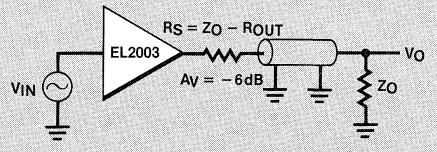

Double Matched

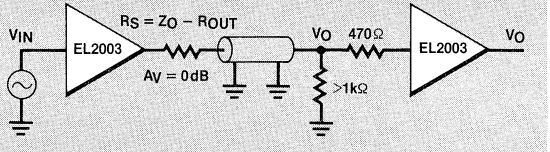

Back Matched

Op Amp Booster

The EL2003 or EL2033C can boost the output drive of almost any monolithic op amp. Because the phase shift in the EL2003/EL2033C is low at the op amp's unity gain frequency, no additional compensation is required. By following an op amp with an EL2003 or EL2033C, the buffered op amp can drive cables and other low impedance loads directly. Even decompensated high speed op amps can take advantage of the EL2003's or EL2033C's 100mA drive.

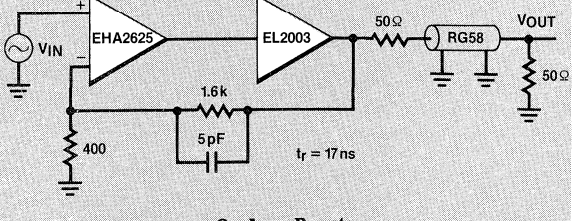

Op Amp Booster

EL2003/2003C/2033C

100 MHz Video Line Driver

Applications Hints—Continued

Driving capacitive loads with any closed loop amplifier creates special problems. The open loop output impedance works into the load capacitance to generate phase lag which can make the loop unstable. The output impedance of the EL2003 or EL2033C is less than 10Ω from DC to about 10MHz, but a capacitive load of 1000pF will generate about 45 degrees phase shift at 10MHz and make high speed op amps unstable. Obviously more capacitance will cause the same problem, but at lower frequencies and slower op amps as well would become unstable.

The easiest way to drive capacitive loads is to isolate them from the feedback with a series resistor. Ten to twenty ohms is usually enough but the final value depends on the op amp used and the range of load capacitance.

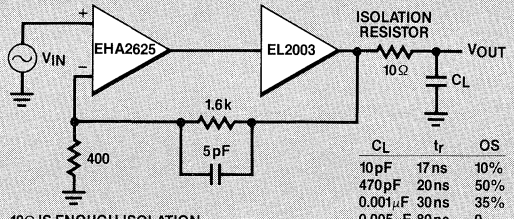

10Ω IS ENOUGH ISOLATION AND SPEED IS DETERMINED BY THE ISOLATION RESISTOR AND CAPACITIVE LOAD TIME CONSTANT.

CL	tr	OS
10pF	17ns	10%
470pF	20ns	50%
0.001μF	30ns	35%
0.005μF	80ns	0
0.01μF	220ns	0
0.05μF	1.1μs	0
0.1μF	2.2μs	0

Op Amp Booster with Capacitive Load

If the system requirements will not tolerate the isolation resistor, then additional high frequency feedback from the op amp output (the buffer input) and an isolating resistor from the buffer output is required. This requires that the op amp be unity gain stable.

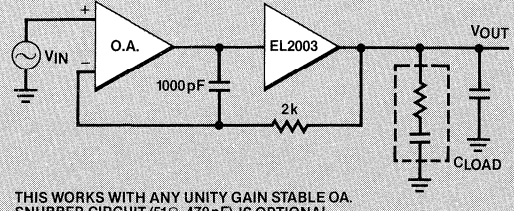

THIS WORKS WITH ANY UNITY GAIN STABLE OA. SNUBBER CIRCUIT (51Ω, 470pF) IS OPTIONAL

Complex Feedback with the Buffer to Drive Capacitive Loads

Typical Applications

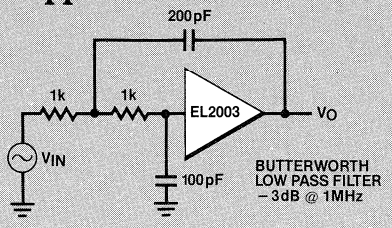

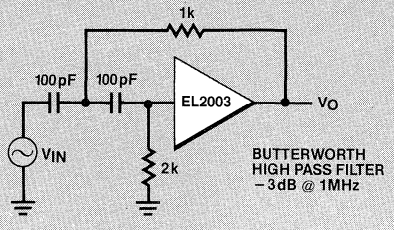

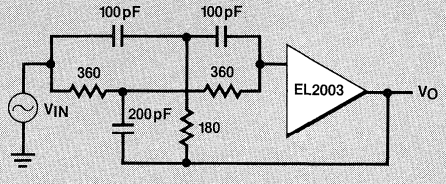

$$f_O = \frac{1}{2\pi\,(100\text{ pF})\,(360)} \approx 4.4\text{ MHz}$$

High Q Notch Filter

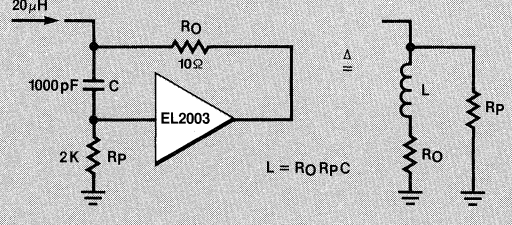

Simulated Inductor

Typical Applications—Continued

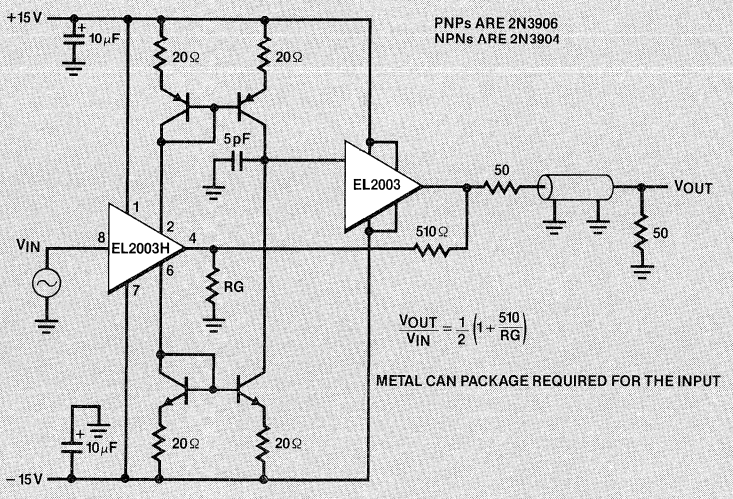

Turbo Amplifier, BW = 30 MHz for Gains from 1 to 5

Video Distribution Amplifier

In this broadcast quality circuit, the EL2006 FET input amplifier provides a very high input impedance so that it may be used with a wide variety of signal sources including video DACs, CCD cameras, video switches or 75ohm cables. The EL2006 provides a voltage gain of 2.5 while the potentiometer allows the overall gain to be adjusted to drive the standard signal levels into the back matched 75ohm cables. Back matching prevents multiple reflections in the event that the remote end of the cable is not properly terminated. The 1K pull up resistors reduce the differential gain error from 0.15% to less than 0.1%.

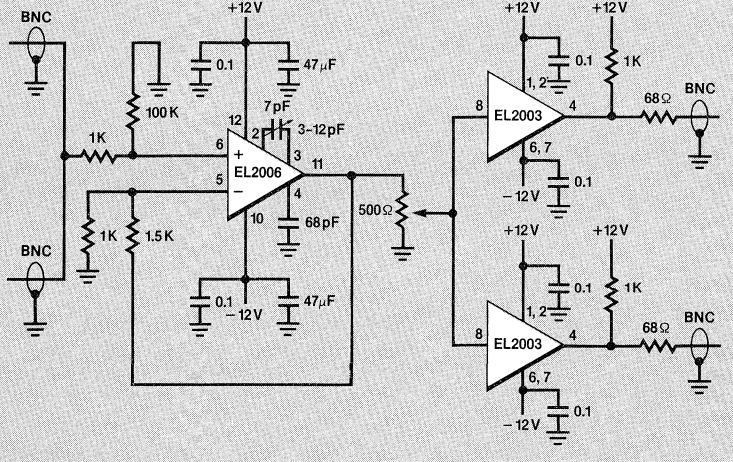

Video Distribution Amplifier

Burn-In Circuit
Metal Can Package Shown

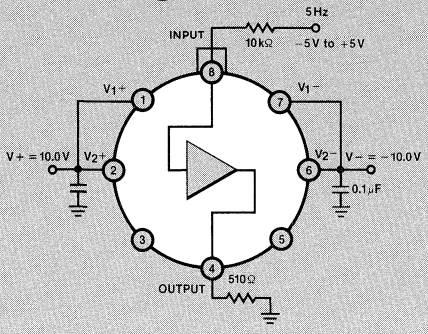

Die Layout EL2003 /EL2033C

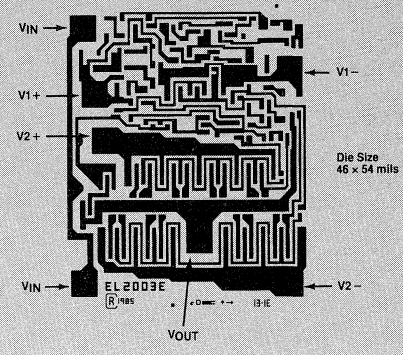

Simplified Schematic

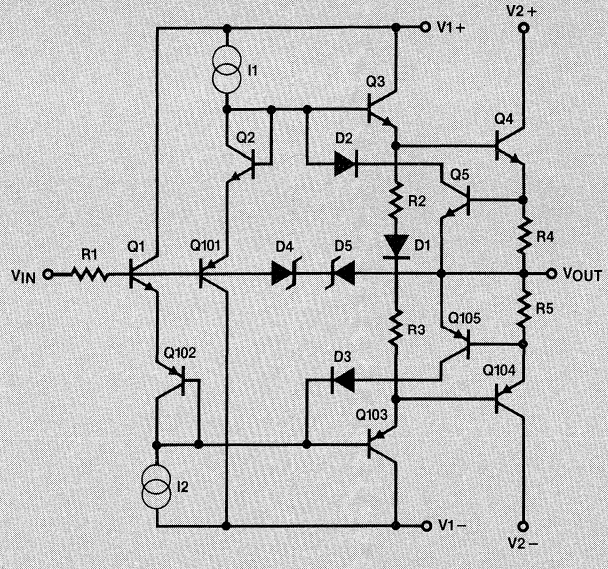

élantec
HIGH PERFORMANCE ANALOG INTEGRATED CIRCUITS

EL2004/EL2004C
350MHz FET Buffer

Features
- Slew rate—2500 V/μs
- Rise time—1ns
- Bandwidth—350 MHz
- ELH0033—Pin Compatible
- ±5 to ±15 V Operation
- 100 mA Output Current
- MIL-STD-883B Rev. C devices manufactured in U.S.A.

Applications
- Coaxial cable driver
- Fast op amp. booster
- Flash converter driver
- Video line driver
- High-speed sample & hold
- Pulse transformer driver
- A.T.E. pin driver

Ordering Information

Part No.	Temp. Range	Pkg.	Outline#
EL2004CG	-25 to +85°C	TO-8	MDP0002
EL2004CG/E+	-25 to +85°C	TO-8	MDP0002
EL2004G	-55 to +125°C	TO-8	MDP0002
EL2004G/883	-55 to +125°C	TO-8	MDP0002
EL2004L	-55 to +125°C	54-Pin LCC	MDP0013
EL2004L/883	-55 to +125°C	54-Pin LCC	MDP0013

Connection Diagrams

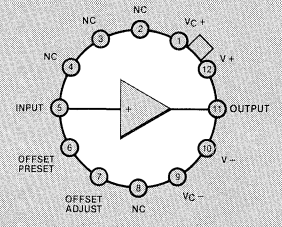

CASE IS ELECTRICALLY ISOLATED
(TOP VIEW)

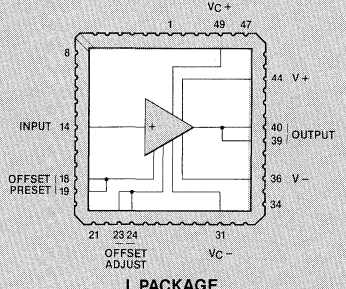

L PACKAGE
(TOP VIEW)

General Description

The EL2004 is a very high-speed, FET input buffer/line driver designed for unity gain applications at both high current (up to 100 mA) and at frequencies up to 350 MHz. The 2500 V/μs slew rate and wide bandwidth ensures the stability of the circuit when the EL2004 is used inside op amp feedback loops.

Applications for the EL2004 include line drivers, video buffers, wideband instrumentation, and high-speed drivers for inductive and capacitive loads. The performance of the EL2004 makes it an ideal buffer for video applications including input buffers for flash A/D converters, and output buffers for video DACs. Its excellent phase linearity is particularly advantageous in digital signal processing applications.

The EL2004 is specified for operation over the -55°C to +125°C military temperature range. The EL2004C is specified for operation over the -25°C to +85°C temperature range. Available packages include the TO-8 metal can, and Leadless Chip Carriers (LCCs) by special order.

Elantec facilities comply with MIL-I-45208A and are MIL-STD-1772 certified. Elantec's Military devices comply with MIL-STD-883B Revision C and are manufactured in our rigidly controlled, ultra-clean facilities in Milpitas, California. For additional information on Elantec's Quality and Reliability Assurance Policy and procedures request brochure QRA–1.

Simplified Schematic

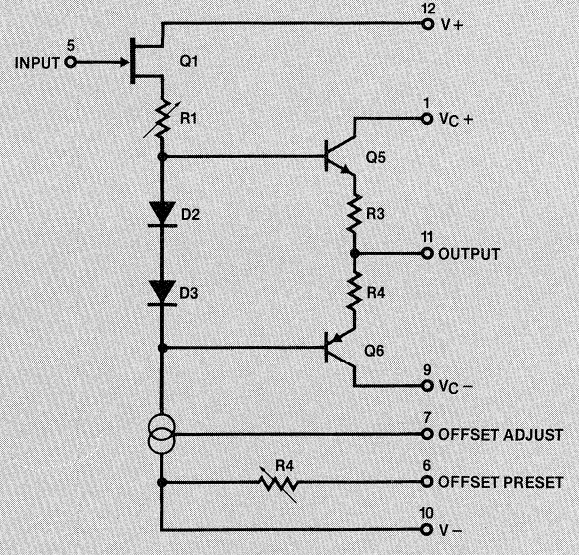

EL2004/EL2004C

350MHz FET Buffer

Absolute Maximum Ratings (25°C)

V_S	Supply Voltage ($V^+ - V^-$)	40V	T_A	Operating Temperature Range:	
V_{IN}	Input Voltage	40V		EL2004	−55°C to +125°C
P_D	Power Dissipation (See curves)	1.5W		EL2004C	−25°C to +85°C
I_{OC}	Continous Output Current	±100mA	T_J	Operating Junction Temperature	175°C
I_{OP}	Peak Output Current	±250mA	T_{ST}	Storage Temperature	−65°C to +150°C
				Lead Temperature (soldering, 10 seconds)	300°C

Important Note: **All parameters having Min./Max. specifications are guaranteed. The Test Level column indicates the specific device testing actually performed during production and Quality Assurance inspection. Elantec performs most electrical tests using modern high-speed automatic test equipment, specifically the LTX 77 Series system. Unless otherwise noted, all tests are pulsed tests, therefore $T_J = T_C = T_A$.**

Test Level **Test Procedure**

I 100% production tested and QA sample tested per QA test plan QCX0002.

II 100% production tested at $T_A = 25°C$, and QA sample tested at $T_A = 25°C$, T_{MAX} and T_{MIN} per QA test plan QCX0002.

III QA sample tested per QA test plan QCX0002.

IV Parameter is guaranteed (but not tested) by Design and Characterization Data.

V Parameter is typical value for information purposes only.

±15V DC Electrical Characteristics

$V_S = \pm 15V$, $T_{MIN} < T_A < T_{MAX}$, $V_{IN} = 0V$, $R_L = 1k\Omega$ unless otherwise specified.[1]

			EL2004				EL2004C				
	Parameter	Test Conditions	Min.	Typ.	Max.	Test Level	Min.	Typ.	Max.	Test Level	Units
V_{OS}	Output Offset Voltage	$R_S \leq 100k\Omega$, $T_J = 25°C$		5	10	I		12	20	I	mV
		$R_S \leq 100k\Omega$			15	I			25	III	mV
A_V	Voltage Gain	$V_{IN} = \pm 10V$	0.97	0.98	1.0	I	0.96	0.98	1.0	II	V/V
		$R_L = \pm 100\Omega$, $V_{IN} = \pm 10V$	0.92	0.95	0.98	I	0.90	0.95	0.98	II	V/V
R_{IN}	Input Impedance	$T_J = 25°C$, $V_{IN} = \pm 1V$	10^{10}	10^{11}		I	10^8	10^{11}		I	Ω
R_{OUT}	Output Impedance	$V_{IN} = \pm 1V_{DC}$, $\Delta R_L = 100\Omega$ to infinity		4	8	I		4	10	II	Ω
V_O	Output Voltage Swing	$V_{IN} = \pm 14V$	±12	±13		I	±12	±13		II	V
		$V_{IN} = \pm 10.5V$, $R_L = 100\Omega$ $T_A = 25°C$	±9	±9.8		I	±9	±9.8		I	V
I_{IN}	Input Current	$T_J = 25°C$ (Note 2)			0.25	I			2.0	I	nA
		$T_A = 25°C$ (Note 3)			2.5	IV			20	IV	nA
		$T_J = T_A = T_{MAX}$			10	I			50	III	nA
		$V_{IN} = -10V$		20		V		20		V	nA
I_S	Supply Current			20	24	I		20	24	II	mA

±5 V DC Electrical Characteristics $V_S = \pm 5V$, $T_{MIN} < T_A < T_{MAX}$, $V_{IN} = 0V$, $R_L = 50\Omega$ unless otherwise specified.

	Parameter	Test Conditions	EL2004				EL2004C				Units
			Min.	Typ.	Max.	Test Level	Min.	Typ.	Max.	Test Level	
V_{OS}	Output Offset Voltage	$R_S \leq 100k\Omega$, $T_J = 25°C$		10	30	I		10	30	I	mV
		$R_S \leq 100k\Omega$			35	I			35	III	mV
A_V	Voltage Gain	$V_{IN} = \pm 1V$, $R_L = 1k\Omega$	0.90	0.95	1.0	I	0.90	0.95	1.0	II	V/V
		$V_{IN} = \pm 1V$	0.80	0.88	0.95	I	0.80	0.88	0.95	II	V/V
R_{IN}	Input Impedance	$T_J = 25°C$, $V_{IN} = \pm 1V$	10^{10}	10^{11}		I	10^{10}	10^{11}		I	Ω
R_{OUT}	Output Impedance	$V_{IN} = \pm 1V_{DC}$, $\Delta R_L = 50\Omega$ to infinity		4	8	I		4	10	II	Ω
V_O	Output Voltage Swing	$V_{IN} = \pm 4V$	±2.0	±2.9		I	±2.0	±2.9		III	V
I_{IN}	Input Current	$T_J = 25°C$ (Note 2)			250	I			500	I	pA
		$T_A = 25°C$ (Note 3)			2.5	IV			5	IV	nA
		$T_J = T_A = T_{MAX}$			10	I			20	III	nA
PSRR	Power Supply Rejection Ratio	$V_S = \pm 5V$ to $\pm 15V$, $R_L = 1k\Omega$		60		V		60		V	dB
I_S	Supply Current	$R_L = 1k\Omega$		17.5	20	I		17.5	20	II	mA

Note 1: When operating at elevated temperatures the power dissipation of the EL2004 must be limited to the values shown in the typical performance curve "Maximum Power Dissipation vs. Temperature". Junction to case thermal resistance is 31°C/W when dissipation is spread among the transistors in a normal AC steady-state condition. In special conditions where heat is concentrated in one output device, junction temperature should be calculated using a thermal resistance of 70°C/W.

Note 2: Specification is at 25°C junction temperature due to requirements of high-speed automatic testing. Actual values at operating temperatures will exceed the value at $T_J = 25°C$. When supply voltages are ±15V, no-load operating junction temperatures may rise 40°C to 60°C above ambient and more under load conditions. Accordingly, V_{OS} may change one to several mV, and I_{IN} will change significantly during warm-up. Refer to I_{IN} vs. Temperature graph for expected values.

Note 3: Measured in still air seven minutes after application of power. See graph of Input Current During Warm-up for further information.

Note 4: Bandwidth is calculated from the rise time. The EL2004 has a single pole gain and phase response up to the −3dB frequency.

Note 5: Slew rate is measured between $V_{OUT} = +2.5V$ and $-2.5V$ for this test.

Note 6: Slew rate is measured between $V_{OUT} = +1V$ and $-1V$ for this test. Pulse repetition rate is < 50MHz.

EL2004/EL2004C
350MHz FET Buffer

±15 V AC Electrical Characteristics $V_S = \pm 15V$, $R_L = 1k\Omega$, $R_S = 50\Omega$, $T_J = 25°C$ unless otherwise specified.

	Parameter	Test Conditions	EL2004				EL2004C				Units
			Min.	Typ.	Max.	Test Level	Min.	Typ.	Max.	Test Level	
BW	Bandwidth	(Note 4)	200	350		I	200	350		I	MHz
		$R_L = 50\Omega$	140	200		I	140	200		I	MHz
t_s	Settling Time to 1%	$\Delta V_{IN} = 1V$, $t_r = 3ns$		6		V		6		V	ns
C_{in}	Input Capacitance			3		V		3		V	pF
S_R	Slew Rate	$V_{IN} = \pm 5V$ (Note 5)	2000	2500		I	2000	2500		I	V/μs
		$C_L = 100pF$, $V_{IN} = \pm 5V$ (Note 5)		1200		V		1200		V	V/μs
t_r	Rise Time Note: See test figure	$\Delta V_{IN} \sim 0.6V$		1.0	1.7	I		1.0	1.7	I	ns
		$\Delta V_{IN} \sim 0.6V$, $R_L = 50\Omega$		1.7	2.5	I		1.7	2.5	I	ns
t_p	Propagation Delay Note: See test figure	$\Delta V_{IN} \sim 0.6V$		1.0	2.0	I		1.0	2.0	I	ns
R_{out}	Output Impedance	$f = 1MHz$, $V_{in} = 1V_{RMS}$ $\Delta R_L = 100\Omega$ to infinity		4		V		4		V	Ω
+PSRR	Power Supply Rejection Ratio	$\Delta V_S+ = \pm 1.5V_{peak}$ $f = 1kHz$		40		V		40		V	dB
−PSRR	Power Supply Rejection Ratio	$\Delta V_S- = \pm 1.5V_{peak}$ $f = 1kHz$		40		V		40		V	dB

AC Test Circuit

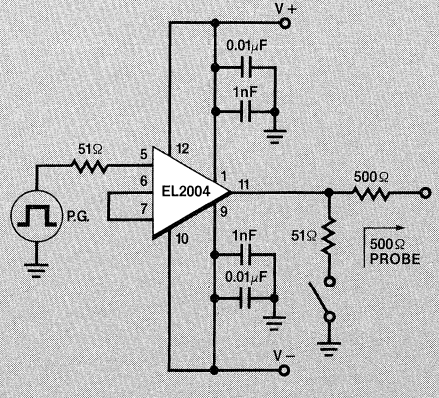

±5 V AC Electrical Characteristics $V_S = \pm 5V$, $R_L = 50\Omega$, $R_S = 50\Omega$, $T_J = 25°C$ unless otherwise specified.

	Parameter	Test Conditions	EL2004				EL2004C				Units
			Min.	Typ.	Max.	Test Level	Min.	Typ.	Max.	Test Level	
BW	Bandwidth	$R_L = 1k\Omega$	175	220		I	175	220		I	MHz
		(Note 4)	125	150		IV	125	150		IV	MHz
t_s	Settling Time to 1%	$\Delta V_{IN} = 1V$, $t_r = 3ns$		8		V		8		V	ns
C_{in}	Input Capacitance			3		V		3		V	pF
S_R	Slew Rate	$V_{IN} = \pm 2V$ (Note 6)	900	1200		I	900	1200		I	V/μs
		$C_L = 100pF$, $V_{IN} = \pm 2V$, $R_L = 1k\Omega$ (Note 6)		500		V		500		V	V/μs
t_r	Rise Time Note: See test figure	$R_L = 1k\Omega$, $\Delta V_{IN} \sim 0.6V$		1.6	2.0	I		1.6	2.0	I	ns
		$R_L = 50\Omega$, $\Delta V_{IN} \sim 0.6V$		2.3	2.8	IV		2.3	2.8	IV	ns
t_p	Propagation Delay Note: See test figure	$R_L = 1k\Omega$, $\Delta V_{IN} \sim 0.6V$		1.2	2.4	I		1.2	2.4	I	ns
R_{out}	Output Impedance	$f = 1MHz$, $V_{in} = 1V_{RMS}$ $\Delta R_L = 100\Omega$ to infinity		4		V		4		V	Ω
+PSRR	Power Supply Rejection Ratio	$\Delta V_S- = \pm 0.5V_{peak}$ $f = 1kHz$		30		V		30		V	dB
−PSRR	Power Supply Rejection Ratio	$\Delta V_S+ = \pm 0.5V_{peak}$ $f = 1kHz$		30		V		30		V	dB

Typical Performance Curves

Maximum Power Dissipation

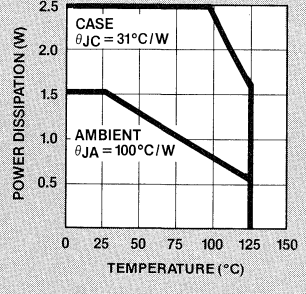

Gain vs Input Voltage

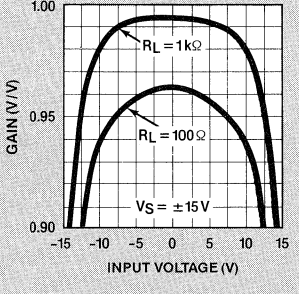

Output Resistance vs Output Current

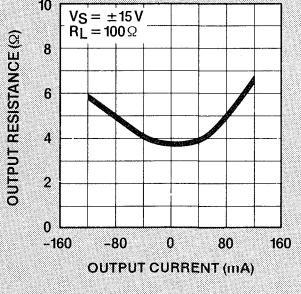

EL2004/EL2004C

350MHz FET Buffer

Typical Performance Curves — Continued

Rise Time vs Temperature

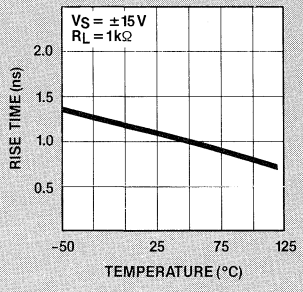

Small Signal Pulse Response

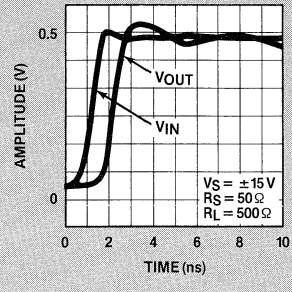

Large Signal Pulse Response

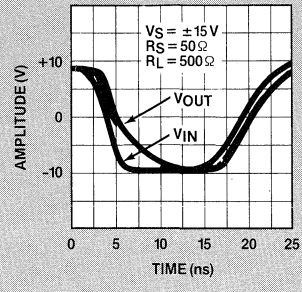

Frequency Response

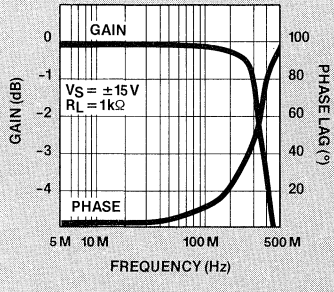

Offset Voltage vs Supply Voltage

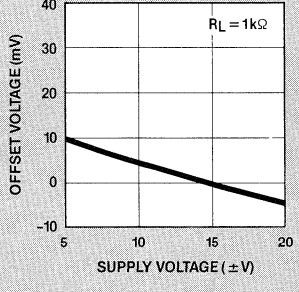

Normalized Input Bias Current During Warm-up

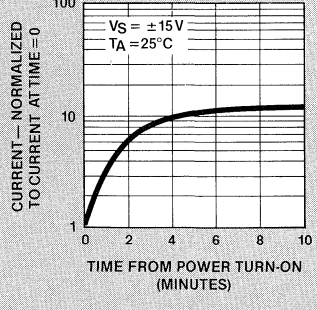

Supply Current vs Supply Voltage

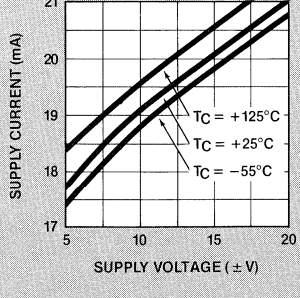

Output Voltage vs Supply Voltage

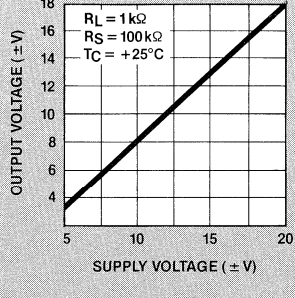

Applications Information

The EL2004 is one member of a family of high performance buffers manufactured by Elantec. The 2004 is optimized for speed while others offer choices of input DC parameters or output drive or cost. The following table illustrates those members available at the time of this printing. Consult the factory for the latest capabilities in this developing line.

Elantec's Buffer Family

Part #	Slew Rate V/μs	Bandwidth MHz	Input Current (Warm)	Peak I_{OUT} mA	Rise Time ns
ELH0002	200	50	6μA	400	7
ELH0033	1500	100	2.5nA	250	2.9
EL2004	2500	350	2.5nA	250	1.0
EL2005	1500	140	0.1nA	250	2.5

Recommended Layout Precautions

The very high-speed performance of the EL2004 can only be realized by taking certain precautions in circuit layout and power supply decoupling. Low inductance ceramic chip or disc power supply decoupling capacitors of 0.1μF or more should be connected with the shortest practical lead lengths between the device supply leads and a ground plane. In addition, it can be helpful to parallel these with 4.7μF electrolytics (Tantalum preferred). Failure to follow these precautions can result in oscillation.

Input Bias Current vs Temperature

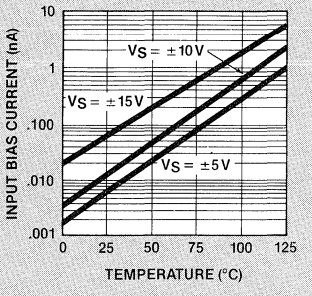

Input Bias Current vs Input Voltage

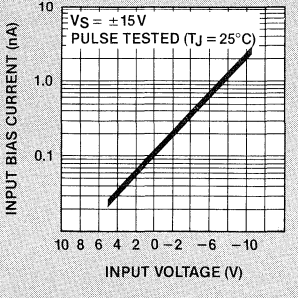

Circuit Operation

The EL2004 is effectively an ideal unity gain amplifier with almost infinite input impedance and about 6Ω output impedance.

Input Characteristics

The input impedance of a junction FET is a strong function of temperature and input voltage. Nominal input resistance of EL2004 is 10^{12} at 25°C junction, but as I_B doubles every 11°C in the JFET, the input resistance falls. During warm-up, self-heating raises the junction temperature up to 60°C or more (without heatsink) so operating I_B will be much higher than the data sheet 25°C specification.

Another factor which can increase bias current is input voltage. If the input voltage is more than 20V below the positive supply, the input current rises exponentially. (See Curve).

In applications such as sample and hold circuits where it is important to maintain low input bias current over input voltage range, the EL2005 High Accuracy Fast Buffer is recommended.

The input capacitance of EL2004 comprises the FET device gate-to-source capacitance (which is a function of input voltage) and stray capacitance to the case. Effective input capacitance can be minimized by connecting the case to the output since it is electrically isolated. Or, for reduced radiation, the case may be grounded. The AC characteristics specified in this data sheet were obtained with the case floating.

Offset Voltage Adjustment

The EL2004's offset voltages have been actively laser trimmed at ±15V supplies to meet specified limits when the offset adjust pin is shorted to the offset preset pin. If external offset null is required, the offset adjust pin should be connected to a 200Ω trim pot connected to the negative supply.

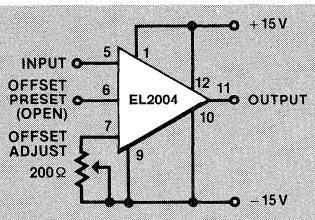

Offset Zero Adjust

Capacitive Loading

The EL2004 is designed to drive capacitive loads up to several thousand picofarads without oscillation. However, peak current resulting from charging currents on fast edges should be limited below the absolute maximum peak current rating of 250mA. In some cases it may be necessary to employ one of the current limit schemes shown below.

Short Circuit Protection

Dynamic response of the EL2004 was preserved by excluding current limit circuits which are not needed in most applications. However, in situations where operating conditions are not controlled, short circuit protection can be added by inserting resistors between the output device collectors and supplies as illustrated.

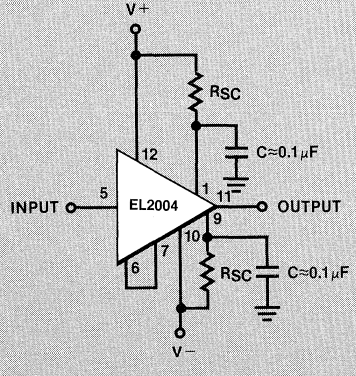

Using Resistor Current Limiting

Suitable resistor values can be calculated as follows:

$$R_{SC} = \frac{V+}{I_{SC}} = \frac{V-}{I_{SC}}$$

where $I_{SC} \leq 100mA$ for EL2004

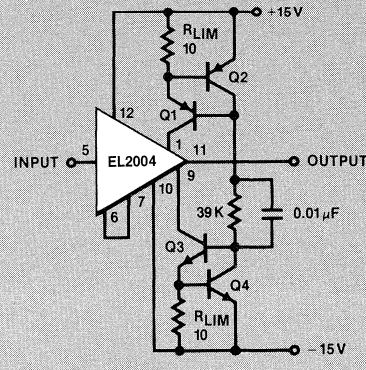

Current Limiting Using Current Sources

The inclusion of limiting resistors in the collectors of the output devices will reduce the output voltage swing and speed. Decoupling V_C+ and V_C- pins with capacitors to ground will retain full output swing for transient pulses.

An alternate active current limit technique that retains full DC output swing is shown above. Here the current sources are saturated during normal operation thus applying full supply voltage to the V_C pins. Under fault conditions, the voltage decreases as the current source reaches its limit.

$$R_{LIM} = \frac{V_{BE}}{I_{SC}} = \frac{0.6V}{100mA} = 6\Omega$$

Power Supplies

The EL2004 has been characterized for both ±15 and ±5V dual supply operation, but other combinations can also be useful. For example, in many video applications it is only necessary for the output to swing ±2V or less, but speed and distortion are important. In this situation, the input stage can be operated at the full ±15V supply while the output collectors are returned to ±5V. The speed and distortion will be almost as good as if the whole circuit was operating at ±15V, but the dissipation is substantially reduced and higher load currents can be safely accommodated.

Increasing Operating Voltage and Reducing Thermal Tail

When driving heavy loads, the changing dissipation in the output transistors can sometimes cause temperature gradients in the circuit which cause a shift in offset voltage and the phenomenon known as "thermal tail". Bootstrapping the output as illustrated substantially reduces the power in the output transistors and mitigates the effect.

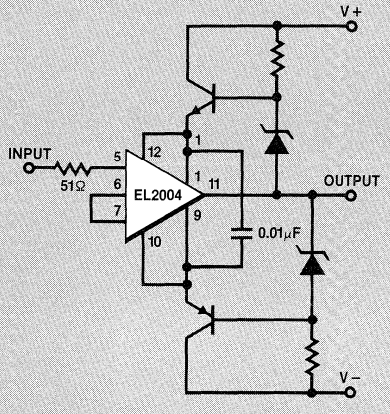

High voltage inputs can be accomodated with bootstrapped supplies

Hardware

In order to utilize the full drive capabilities of the EL2004, it should be mounted with a heatsink, particularly for extended temperature operation. Suitable heatsinks include Thermalloy 2240A (33°C/W), Wakefield 215CB (30°C/W) and IERC-UP-TO-848CB (15°C/W).

The case is isolated from the circuit and may be connected to system chassis. Sockets are not recommended as they add substantial inductance and capacitance which impair the performance of the device. However, for test purposes they are unavoidable and precautions such as shielding input from output are suggested.

General Application Suggestions

Video DAC Buffer

Many of the available video D to A converters are unable to directly drive 50Ω or 75Ω cables. The EL2004's excellent phase linearity at video frequencies make it an ideal solution. In critical applications or where line termination is not controlled, a matching pad should be used as shown. The capacitor should be adjusted for optimum pulse response. If properly layed out this circuit will not overshoot.

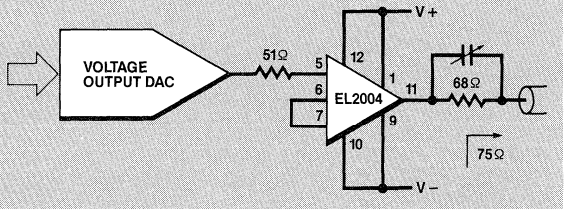

Video DAC Buffer

Impedance Matching

The EL2004 provides power gain and isolation between source and load when used as an active tap or impedance matching device as illustrated here. In this example, there is no output matching pad between the 2004 and the 75Ω line. Such matching is not needed when the distant end of the cable is properly terminated as there is no reflected signal to worry about and the 2004 isolates the source. This technique allows the full output voltage of the EL2004 to be applied to the load.

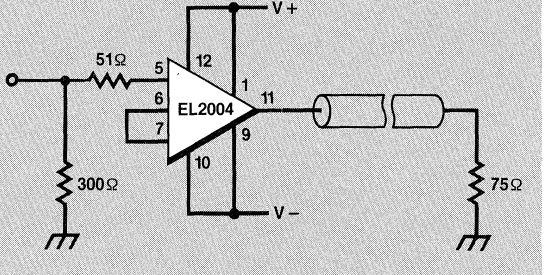

Impedance Converter

EL2004/EL2004C
350MHz FET Buffer

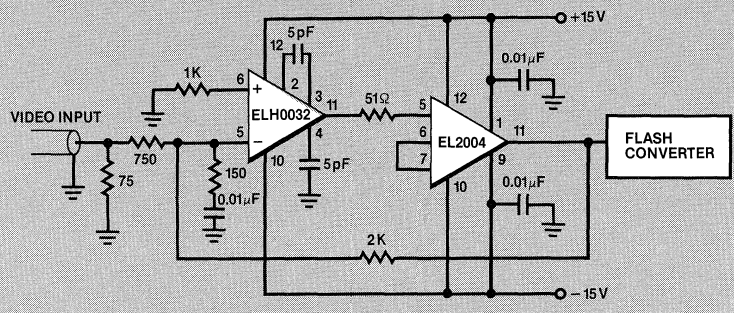

Inverting Amplifier for 20MHz Flash Converter

Boosting the Output

Unlike most integrated circuits, two or more EL2004's can be paralleled for increased output drive. This capability results from the finite output resistance and low output mismatch of the EL2004. For example, a 50Ω cable driver with ±10V capability can be made by using two EL2004's. A short-circuit protected version is shown below.

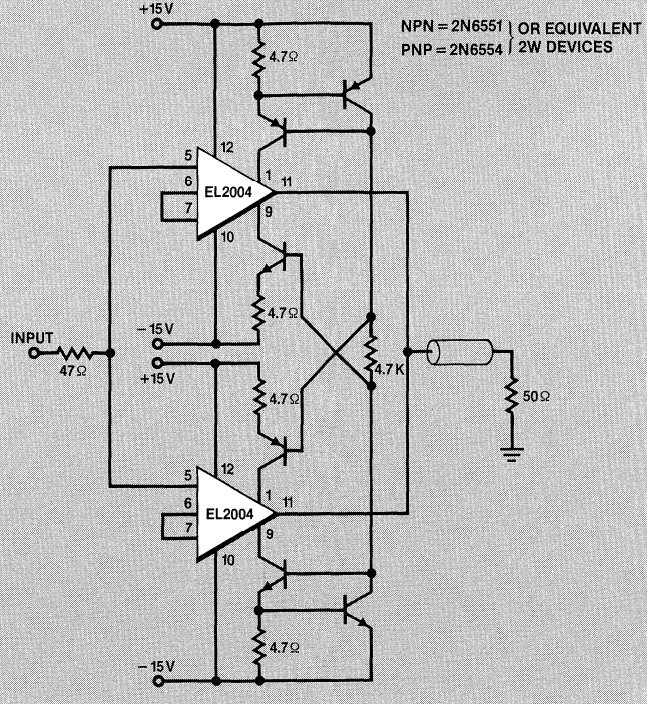

50Ω Cable Driver with Short Circuit Protection

Burn-In Circuit

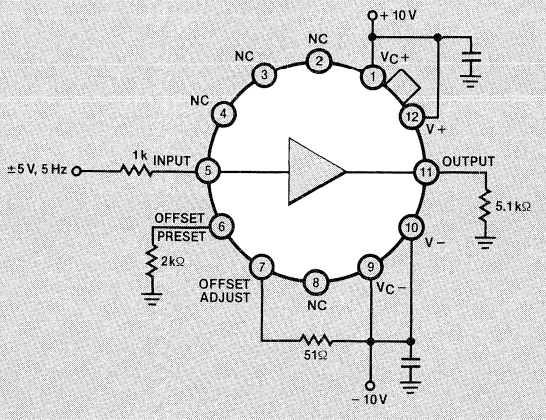

EL2005/EL2005C

High Accuracy Fast Buffer

Features

- Low input current—50pA
- Low offset & drift—2mV/25μV/°C
- High slew rate—1500V/μs
- Fast rise & fall time—2.5ns
- High input resistance—1000GΩ
- Power bandwidth—140MHz
- Pin compatible with ELH0033
- MIL-STD-883 Revision C devices manufactured in U.S.A.

Advantages

- No input loading
- Input current independent of input voltage
- Eliminates offset adjustments
- Drives cables directly

Ordering Information

Part No.	Temp. Range	Pkg.	Outline#
EL2005CG	-25 to +85°C	TO-8	MDP0002
EL2005CG/E+	-25 to +85°C	TO-8	MDP0002
EL2005G	-55 to +125°C	TO-8	MDP0002
EL2005G/883	-55 to +125°C	TO-8	MDP0002

Connection Diagram

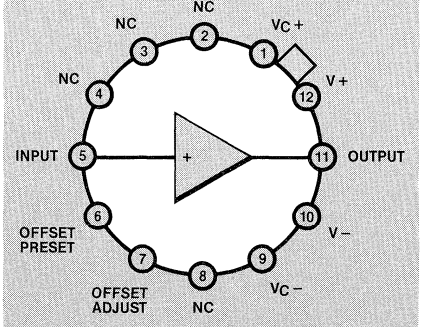

CASE IS ELECTRICALLY ISOLATED

TOP VIEW

General Description

The EL2005 is a high-speed, FET input buffer similar to ELH0033 and EL2004 but with input specifications significantly improved over the previous types. The input stage employs a cascode configuration to maintain constant input characteristics over the full ±10V input range. The input looks like a 3pF capacitor to ground in almost all cases since the DC bias current is constant with input voltage. In sample and hold circuits this results in an order of magnitude improvement in hold characteristics. Input offset voltage and offset voltage drift are also improved a factor of two over previous types.

These excellent DC characteristics are complemented by a wide 140MHz bandwidth while the 1500V/μs slew rate and excellent phase linearity of the ELH0033 family are preserved allowing direct plug-in replacement for upgraded performance. (For even faster operation see EL2004).

The EL2005 is specified for operation over the −55°C to +125°C military temperature range. The EL2005C is specified for operation over the −25°C to +85°C temperature range. Available packages include the TO-8 metal can, and Leadless Chip Carriers (LCCs) by special order.

Elantec facilities comply with MIL-I-45208A and are MIL-STD-1772 certified. Elantec's Military devices comply with MIL-STD-883B Revision C and are manufactured in our rigidly controlled, ultra-clean facilities in Milpitas, California. For additional information on Elantec's Quality and Reliability Assurance Policy and procedures request brochure QRA-1.

Simplified Schematic

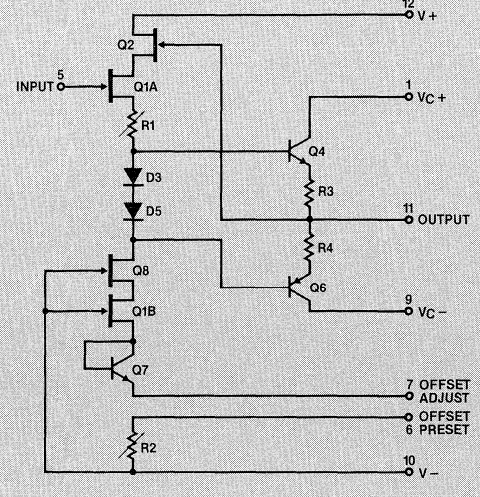

Absolute Maximum Ratings (25°C)

V_S	Supply Voltage (V+–V–)	40V	T_A	Operating Temperature Range:	
V_{IN}	Input Voltage	40V		EL2005	–55°C to +125°C
P_D	Power Dissipation (See curves)	1.5W		EL2005C	–25°C to +85°C
I_{OC}	Continous Output Current	±100mA	T_J	Operating Junction Temperature	175°C
I_{OP}	Peak Output Current	±250mA	T_{ST}	Storage Temperature	–65°C to +150°C
				Lead Temperature (soldering, 10 seconds)	300°C

Important Note: **All parameters having Min./Max. specifications are guaranteed. The Test Level column indicates the specific device testing actually performed during production and Quality Assurance inspection. Elantec performs most electrical tests using modern high-speed automatic test equipment, specifically the LTX 77 Series system. Unless otherwise noted, all tests are pulsed tests, therefore $T_J=T_C=T_A$.**

Test Level	Test Procedure
I	100% production tested and QA sample tested per QA test plan QCX0002.
II	100% production tested at $T_A=25°C$, and QA sample tested at $T_A=25°C$, T_{MAX} and T_{MIN} per QA test plan QCX0002.
III	QA sample tested per QA test plan QCX0002.
IV	Parameter is guaranteed (but not tested) by Design and Characterization Data.
V	Parameter is typical value for information purposes only.

DC Electrical Characteristics $V_S=\pm15V$, $V_{IN}=0V$, $T_{MIN}\leq T_A\leq T_{MAX}$

			EL2005				EL2005C				
	Parameter	Test Conditions	Min.	Typ.	Max.	Test Level	Min.	Typ.	Max.	Test Level	Units
V_{OS}	Output Offset Voltage	$R_S\leq100k\Omega$, $T_J=25°C$ (Note 1)		2	5	I		3	10	I	mV
		$R_S\leq100k\Omega$			10	I			15	III	mV
$\Delta V_{OS}/\Delta T$	Average Temperature Coefficient of Offset Voltage	$R_S=100\Omega$		25		V		25		V	µV/°C
PSRR	Supply Rejection	$\pm10V\leq V_S\leq\pm20V$	65	75		I	60	75		II	dB
I_B	Input Bias Current	$T_J=25°C$ (Notes 1 and 3)		2	50	I		5	100	I	pA
		$T_A=25°C$ (Notes 2 and 3)		50	500	IV		100	1000	IV	pA
		$T_J=T_A=T_{MAX}$		2	5	I		0.5	5	III	nA
A_V	Voltage Gain	$R_S=100\Omega$, $R_L=1k\Omega$, $V_{IN}=\pm10V$	0.97	0.98	1.00	I	0.96	0.98	1.00	II	V/V
		$R_S=100\Omega$, $R_L=100\Omega$, $V_{IN}=\pm10V$	0.88	0.95	0.98	I	0.88	0.95	0.99	II	V/V
R_{IN}	Input Impedance	$R_L=1k\Omega$, $-10V\leq V_{IN}\leq\pm10V$	2×10^9	10^{12}		I	2×10^9	10^{12}		IV	Ω
		$T_J=25°C$ (Note 1), $R_L=1k\Omega$	10^{10}	10^{12}		I	10^{10}	10^{12}		I	Ω
R_O	Output Impedance	$R_L=1k\Omega$, $V_{IN}=\pm1V$		4	8	I		4	9	II	Ω
V_O	Output Voltage Swing	$V_{IN}=\pm14V$, $R_L=1k\Omega$	±12	±12.5		I	±12	±12.5		II	V
		$V_{IN}=\pm10.5V$, $R_L=100\Omega$, $T_A=25°C$	±9	±9.8		I	±9	±9.8		I	V
I_S	Supply Current			19	22	I		19	24	II	mA
	Power Consumption			570	660	I		570	720	II	mW

(See Notes on next page)

EL2005/EL2005C

High Accuracy Fast Buffer

AC Electrical Characteristics $T_C=25°C$, $V_S=\pm15V$, $R_S=50\Omega$, $R_L=1k\Omega$

	Parameter	Test Conditions	EL2005 Min.	EL2005 Typ.	EL2005 Max.	EL2005 Test Level	EL2005C Min.	EL2005C Typ.	EL2005C Max.	EL2005C Test Level	Units
S_R	Slew Rate	$V_{IN}=\pm10V$, $V_{OUT}=\pm5V$	1000	1500		III	1000	1500		III	V/μs
BW	Bandwidth	$V_{in}=1V_{rms}$		140		V		140		V	MHz
	Phase Non-Linearity	BW=1 to 20 MHz		2		V		2		V	Degree
t_r	Rise Time	$\Delta V_{IN}=0.5V$		2.5		V		2.5		V	ns
t_p	Propagation Delay	$\Delta V_{IN}=0.5V$		1.0		V		1.0		V	ns
HD	Harmonic Distortion	f>1kHz		<0.1		V		<0.1		V	%
A_v	Voltage Gain	$R_S=100\Omega$, $V_{in}=1V_{rms}$, f=1kHz	0.97	0.99	1.00	I	0.96	0.99	1.00	II•	V/V
R_o	Output Impedance	$V_{in}=1V_{rms}$, f=1kHz		4	8	I		4	9	II	Ω

Note 1: Specification is at 25°C junction temperature due to requirements of high-speed automatic testing. Actual values at operating temperatures will exceed the value at $T_J=25°C$. When supply voltages are ±15V, no-load operating junction temperatures may rise 40°C to 60°C above ambient and more under load conditions. Accordingly, V_{OS} may change one to several mV, and I_B will change significantly during warm-up. Refer to I_B vs. Temperature graph for expected values.

Note 2: Measured in still air seven minutes after application of power.

Note 3: Input bias current is guaranteed over the input range of $-10V \leq V_{IN} \leq +10V$.

Typical Performance Curves

Maximum Power Dissipation

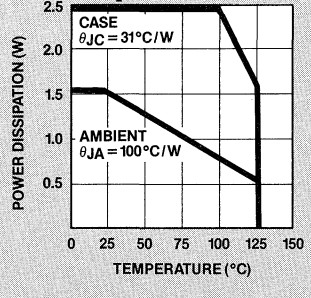

Gain vs Input Voltage

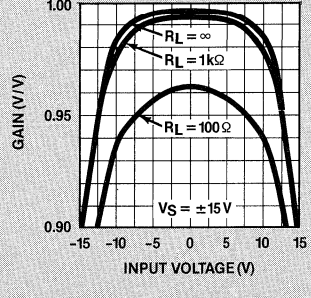

Output Resistance vs Output Current

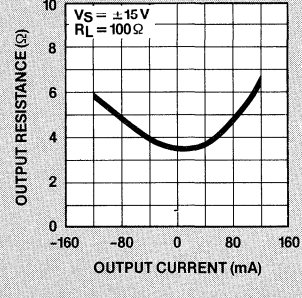

Frequency Response

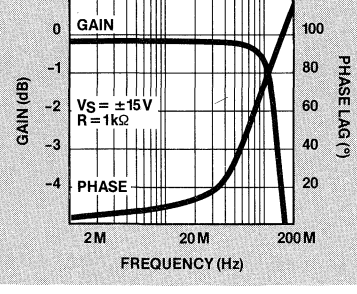

Supply Current vs Supply Voltage

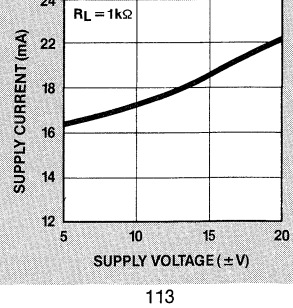

Offset Voltage vs Supply Voltage

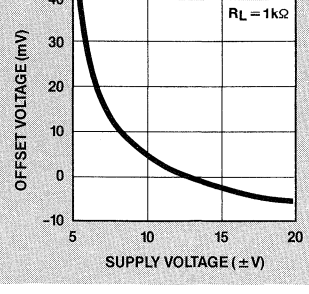

Typical Performance Curves—Continued

Input Bias Current vs Input Voltage

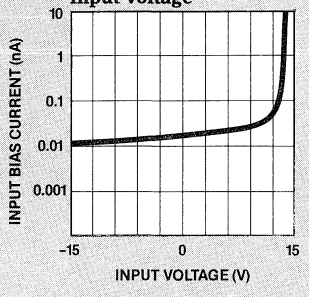

Input Bias Current vs Temperature

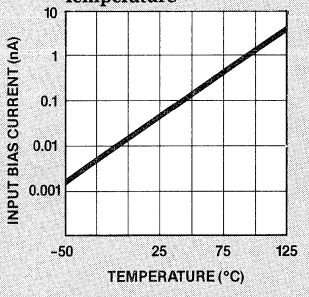

Input Bias Current During Warm-up

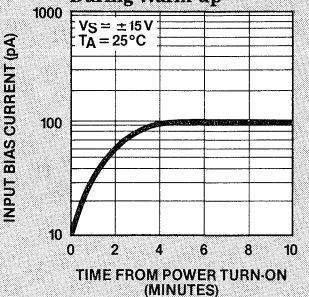

Rise Time vs Temperature

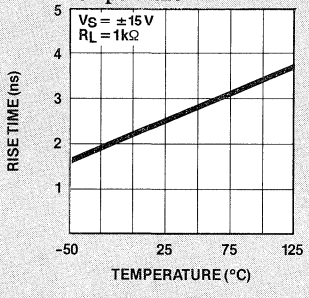

Small Signal Pulse Response

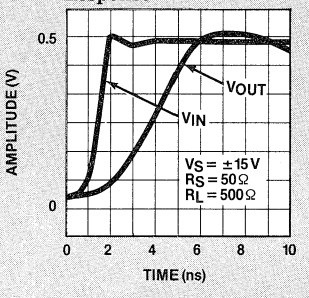

Large Signal Pulse Response

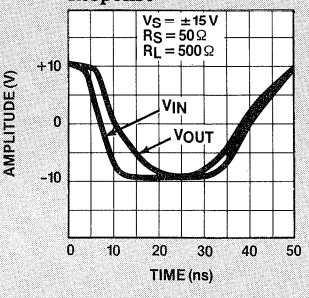

Typical Applications

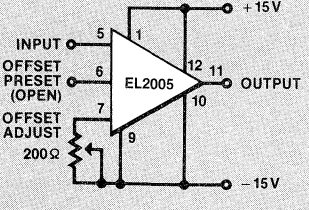

Offset Zero Adjust

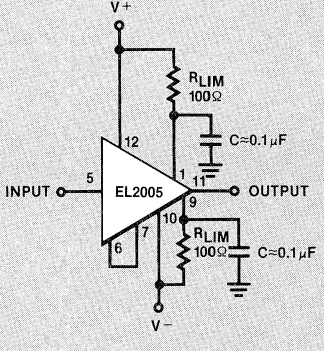

Using Resistor Current Limiting

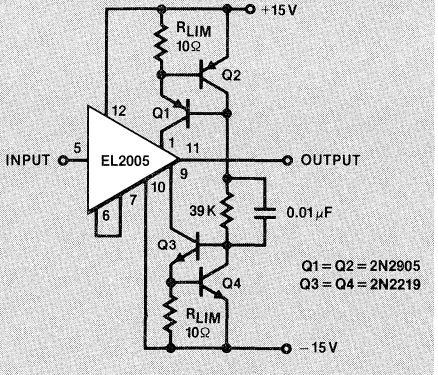

Current Limiting Using Current Sources

EL2005/EL2005C
High Accuracy Fast Buffer

Typical Applications—Continued

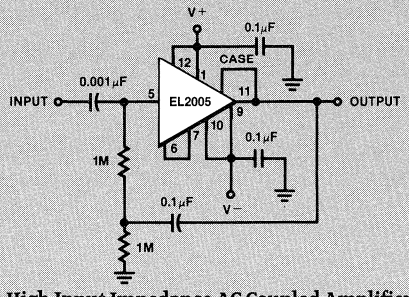

High Input Impedance AC Coupled Amplifier

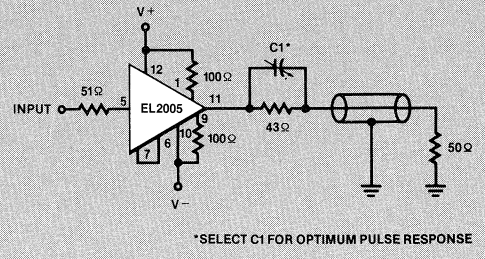

*SELECT C1 FOR OPTIMUM PULSE RESPONSE

Coaxial Cable Driver

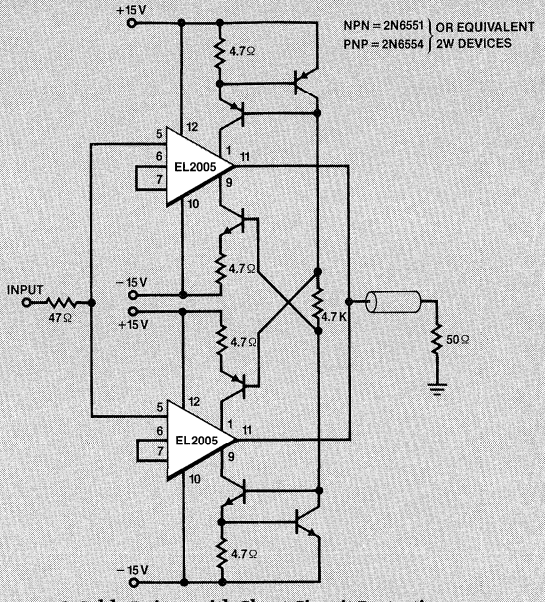

50Ω Cable Driver with Short Circuit Protection

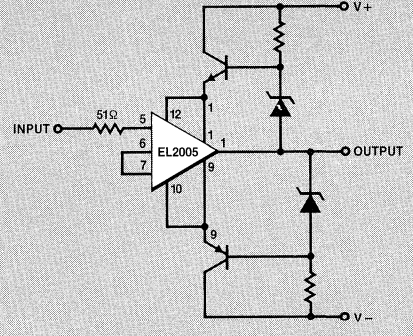

Bootstrapped Supplies for High Voltage Applications

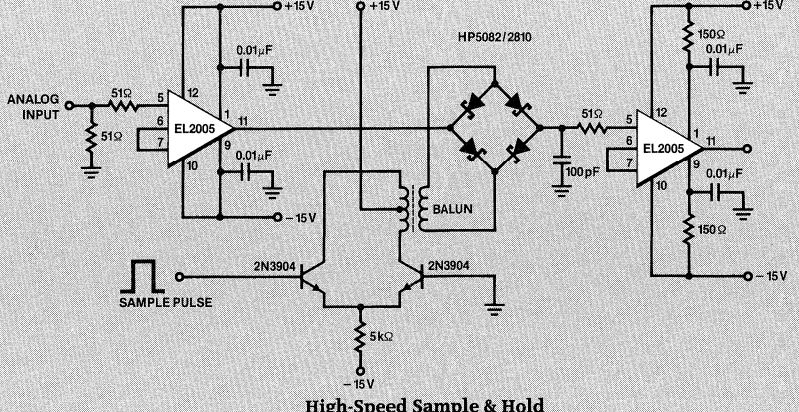

High-Speed Sample & Hold

Applications Information

Recommended Layout Precautions

RF/video printed circuit board layout rules should be followed when using the EL2005 since it will provide power gain to frequencies over 100 MHz. Ground planes are recommended and power supplies should be decoupled at each device with low inductance capacitors. In addition, ground plane shielding may be extended to the metal case of the device since it is electrically isolated from internal circuitry. Alternatively, the case should be connected to the output to minimize input capacitance.

Offset Voltage Adjustment

The EL2005's offset voltages have been actively trimmed by laser to meet guaranteed specifications when the offset preset pin is shorted to the offset adjust pin. The pre-calibration allows the devices to be used in most DC or AC applications without individually offset nulling each device. If offset null is desirable, it is simply obtained by leaving the offset preset pin open and connecting a trim pot of 200Ω between the offset adjust pin and V– as illustrated on Page 4.

Operation from Single or Asymmetrical Power Supplies

This device type may be readily used in applications where symmetrical supplies are unavailable or not desirable. In this case, an apparent output offset occurs due to the device's voltage gain of less than unity. This additional output offset error may be predicted by:

$$\Delta V_O \cong (1-A_V)\frac{(V+ - V-)}{2} = 0.005\,(V+ - V-)$$

where: A_V = No load voltage gain, typically 0.99
V+ = Positive supply voltage
V– = Negative supply voltage

For example, with V+ = +5 V and V– = –12 V, ΔV_O would be –35 mV. This may be adjusted to zero as described above.

Short Circuit Protection

In order to optimize transient response and output swing, output current limit has been omitted from the EL2005. Short circuit protection may be added by inserting appropriate value resistors between V+ and V_C+ pins and V– and V_C– pins as shown on page 4.

Resistor values may be predicted by:

$$R_{LIM} \cong \frac{V+}{I_{SC}} = \frac{V-}{I_{SC}}$$

where: $I_{SC} \leq 100$ mA for EL2005

The inclusion of limiting resistors in the collectors of the output transistors reduces output voltage swing. Decoupling V_C+ and V_C– pins with capacitors to ground will retain full output swing for transient pulses. An alternate active current limit technique that retains full DC output swing is also shown on page 4. In this circuit, the current sources are saturated during normal operation thus applying full supply voltage to the V_C pins. Under fault conditions, the voltage decreases as required by the overload.

$$R_{LIM} \cong \frac{V_{BE}}{I_{SC}} = \frac{0.6V}{60mA} = 10\Omega$$

Capacitive Loading

The EL2005 is designed to drive capacitive loads such as coaxial cables in excess of several thousand picofarads without susceptibility to oscillation. However, peak current resulting from (C×dV/dt) should be limited below absolute maximum peak current ratings for the devices.

Thus:

$$\frac{\Delta V_{IN}}{\Delta t} \times C_L \leq I_{OUT} \leq \pm 250mA$$

In addition, power dissipation resulting from driving capacitive loads plus standby power should be kept below the total package power rating:

$$P_D pkg \geq P_{DC} + P_{AC}$$
$$P_D pkg \geq (V+ - V-) \times I_S + P_{AC}$$
$$P_{AC} \cong (V_{P\text{-}P})^2 \times f \times C_L$$

where: $V_{P\text{-}P}$ = Peak-to-peak output voltage swing
f = Frequency
C_L = Load Capacitance

Operation Within an Op Amp Loop

The EL2005 may be used as a current booster or isolation buffer within a closed loop with op amps such as the ELH0032 and HA2500 and HA2600 series. An isolation resistor of 47Ω should be used between the op amp output and the input of EL2005. The wide bandwidth and high slew rates of the EL2005 assure that the loop has the characteristics of the op amp and that additional rolloff is not required.

EL2005/EL2005C
High Accuracy Fast Buffer

Burn-In Circuit

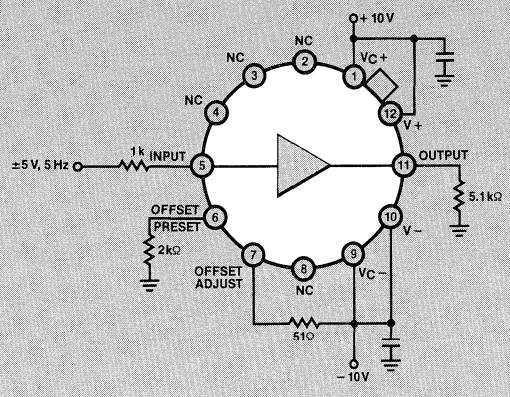

Hardware

In order to utilize the full drive capabilities of the EL2005, it should be mounted with a heatsink, particularly for extended temperature operation. The case is isolated from the circuit and may be connected to system chassis.

IMPORTANT!

Power supply bypassing is necessary to prevent oscillation with the EL2005 in all circuits. Low inductance ceramic disc capacitors with the shortest practical lead lengths must be connnected from each supply lead (within 1/4" to 1/2" of the device package) to a ground plane. Capacitors should be one or two 0.1μF in parallel; adding a 4.7μF solid tantalum capacitor will help in troublesome instances.

Comparators



TM

élantec

HIGH PERFORMANCE ANALOG INTEGRATED CIRCUITS

Elantec Comparators

ELANTEC Part Number	Description	Typ. Prop Delay (5 mV over-drive)	Typ. Open Loop Gain (V/V)	Input Common Mode Range		Typ. Input Bias Current	Supply Current		Temp. Range	Packages
				(V_{CC} = ±15 V)	(V_{CC} = ±5 V)		Output Active	Output 3-State		
EL2018	Fast, High Voltage Comparator with Latch 3-State Output Monolithic, Target Specification	20 ns From Input to Output	100,000 (100 dB)	±13 V	±3 V	±100 nA	+8/−14 mA	±5 mA	−55 to 125°C −25 to 85°C	8 Pin Cerdip 8 Pin P-DIP
EL2019	Fast, High Voltage Comparator with Master Slave Flip-Flop 3-State Output Monolithic, Target Specification	15 ns From Clock to Output	100,000 (100 dB)	±13 V	±3 V	±100 nA	+8/−14 mA	+5/−6 mA	−55 to 125°C −25 to 85°C	8 Pin Cerdip 8 Pin P-DIP

EL2018/EL2018C

Fast, High Voltage Comparator with Transparent Latch

Features

- Fast response—20ns
- Wide input differential voltage range—±10V
- Precision input stage—V_{OS}=2mV typ.
- Low input bias current—200nA typ.
- Low input offset current—100nA typ.
- ±4.5V to ±18V supplies
- 3 State TTL compatible output
- No supply current glitch during switching
- High voltage gain—100,000 V/V typ.
- 50% power reduction in shutdown mode
- Input and latch remain active in shutdown mode

Applications

- Analog to digital converters
- ATE pin receiver
- Precision crystal oscillators
- Zero crossing detector
- Window detector
- Pulse width modulation generator
- "Go/no-go" detector

Ordering Information

Part No.	Temp. Range	Pkg.	Outline#
EL2018CH	-25 to +85°C	TO-99	MDP0004
EL2018CH/E+	-25 to +85°C	TO-99	MDP0004
EL2018H	-55 to +125°C	TO-99	MDP0004
EL2018H-8	-55 to +125°C	TO-99	MDP0004
EL2018CN	-25 to +85°C	P-DIP	MDP0006
EL2018CN/E+	-25 to +85°C	P-DIP	MDP0006
EL2018CJ	-25 to +85°C	Cerdip	MDP0010
EL2018CJ/E+	-25 to +85°C	Cerdip	MDP0010
EL2018J	-55 to +125°C	Cerdip	MDP0010
EL2018J-8	-55 to +125°C	Cerdip	MDP0010

General Description

The EL2018 represents a quantum leap forward in comparator speed, accuracy and functionality. Manufactured with Elantec's proprietary Dielectric Isolation (DI) process, this device uses fast PNP and NPN transistors in the signal path. A unique circuit design gives the inputs the ability to handle large common mode and differential mode signals, yet retain high speed and excellent accuracy. Careful design of the front end insures the part maintains speed and accuracy when operating with a mix of small and large signals. The three-state output stage is designed to be TTL compatible for any power supply combination, yet it draws a constant current and does not generate glitches. When the output is disabled, the supply current consumption drops by 50%, but the input stage and latch remain active.

The EL2018 will be available in 8 pin Cerdip, 8 pin plastic DIP, and 8 pin metal can packages.

Elantec facilities comply with MIL-I-45208A and other applicable quality specifications. For information on Elantec's military processing, see the section: *Elantec's Military Processing—Monolithic Products.*

Connection Diagrams

TO-99

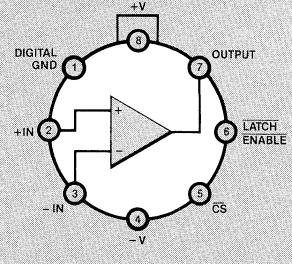

8-PIN DIP

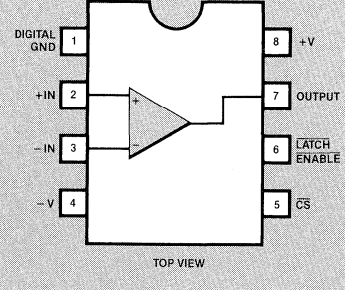

TOP VIEW

Block Diagram

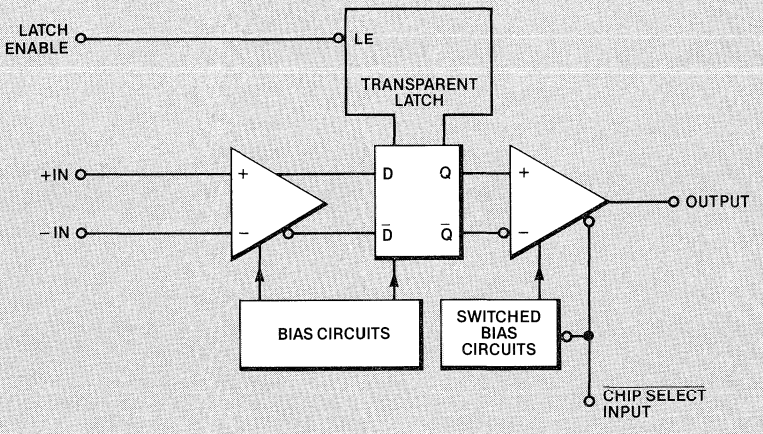

EL2018 Function Table

INPUTS (time n−1)				Internal Q	Notes	OUTPUT
in+	in−	$\overline{CS}$	LE			
+	−	L	L	H	Normal Comparator Operation	H
−	+	L	L	L		L
+	−	H	L	H	Internal Normal Comparator Operation	High Z
−	+	H	L	L	Output Power Down Mode	High Z
X	X	L	H	Qn−1	Data Retained in latch	Qn−1
X	X	H	H	Qn−1	Data Retained in latch Power Down Mode	High Z

EL2019/EL2019C

Fast, High Voltage Comparator with Master Slave Flip-Flop

Features

- Resistant to oscillation
- Fast response—15 ns typ. clock to output, 5 ns data to clock setup
- Wide input differential voltage range— ±10 V
- Precision input stage— V_{OS}=2 mV typ.
- Low input bias current— 200 nA typ.
- Low input offset current— 100 nA typ.
- ±4.5 V to ±18 V supplies
- 3 State TTL compatible output
- No supply current glitch during switching
- Infinite voltage gain (Very small input uncertainty ≈30 μV)
- 50% power reduction in shutdown mode
- Input and flip-flop remain active in shutdown mode

Applications

- Analog to digital converters
- ATE pin receiver
- Zero crossing detector
- Window detector
- "Go/no-go" detector

Ordering Information

Part No.	Temp. Range	Pkg.	Outline#
EL2019CH	−25 to +85°C	TO-99	MDP0004
EL2019CH/E+	−25 to +85°C	TO-99	MDP0004
EL2019H	−55 to +125°C	TO-99	MDP0004
EL2019H-8	−55 to +125°C	TO-99	MDP0004
EL2019CN	−25 to +85°C	P-DIP	MDP0006
EL2019CN/E+	−25 to +85°C	P-DIP	MDP0006
EL2019CJ	−25 to +85°C	Cerdip	MDP0010
EL2019CJ/E+	−25 to +85°C	Cerdip	MDP0010
EL2019J	−55 to +125°C	Cerdip	MDP0010
EL2019J-8	−55 to +125°C	Cerdip	MDP0010

General Description

The EL2019 offers a new feature previously unavailable in a comparator before—a master slave edge triggered flip-flop. For the comparator output to change states the comparator must get a positive going clock edge. Thus the output can't feed back to the input and cause oscillation. Manufactured with Elantec's proprietary Dielectric Isolation (DI) process, this device uses fast PNP and NPN transistors in the signal path. A unique circuit design gives the inputs the ability to handle large common mode and differential mode signals, yet retain high speed and excellent accuracy. Careful design of the front end insures the part maintains speed and accuracy when operating with a mix of small and large signals. The three-state output stage is designed to be TTL compatible for any power supply combination, yet it draws a constant current and does not generate current glitches. When the output is disabled, the supply current consumption drops by 50%, but the input stage and master slave flip-flop remain active.

The EL2019 will be available in 8 pin Cerdip, 8 pin plastic DIP, and 8 pin metal can packages.

Elantec facilities comply with MIL-I-45208A and other applicable quality specifications. For information on Elantec's military processing, see the section: *Elantec's Military Processing—Monolithic Products.*

Connection Diagrams

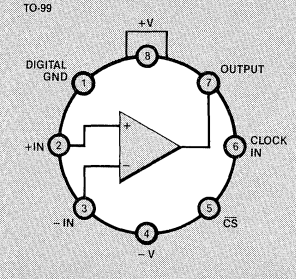

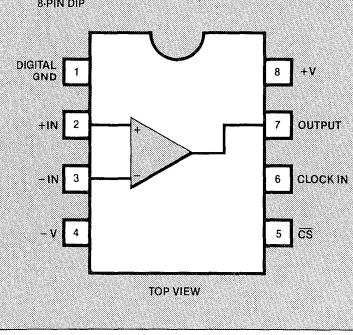

DECEMBER, 1986 REV. A

Block Diagram

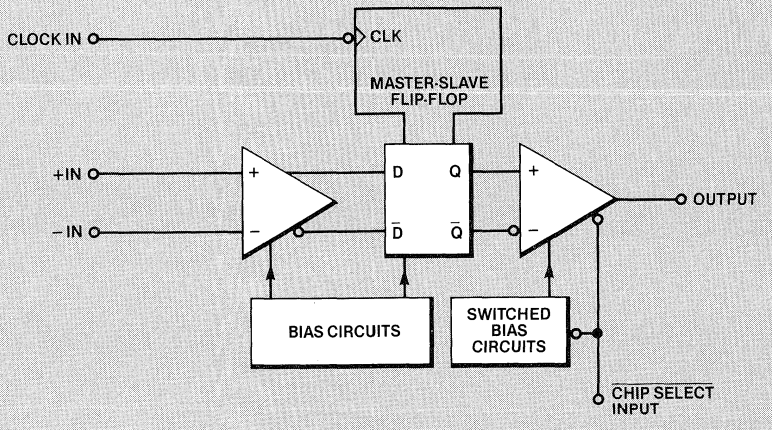

EL2019 Function Table

INPUTS (time n–1)				Internal Q(time n)	Notes	OUTPUT (time n)
in+	in–	$\overline{CS}$	CLK			
+	–	L	↑	H	Normal Comparator Operation	H
–	+	L	↑	L	With "D" Flip-Flop	L
+	–	H	↑	H	Normal Comparator Operation	High Z
–	+	H	↑	L	With "D" Flip-Flop; Power Down Mode	High Z
X	X	L	H	Qn–1	Data Retained in Flip-Flop	Qn–1
X	X	L	L	Qn–1	Data Retained in Flip-Flop	Qn–1
X	X	L	↓	Qn–1	Data Retained in Flip-Flop	Qn–1
X	X	H	H	Qn–1	Data Retained in Flip-Flop, Output Power Down Mode	High Z
X	X	H	L	Qn–1	Data Retained in Flip-Flop, Output Power Down Mode	High Z
X	X	H	↓	Qn–1	Data Retained in Flip-Flop, Output Power Down Mode	High Z

Arrays



TM

élantec

HIGH PERFORMANCE ANALOG INTEGRATED CIRCUITS

ELANTEC Part Number	Description	Test Temp.	V_{be} Match		H_{fe} Match		Min. H_{fe}		BV_{ceo}–BV_{cbo} Over Temp. (Min.)	Packages
			25°C	Over Temp.	25°C	Over Temp.	25°C	Over Temp.		
EP2015	Monolithic, D.I. Matched Quad PNP Transistor Array	−55 to 125°C	5mV	10mV	10%	20%	75	50	40V	14 Pin Cerdip
EP2015C		25°C	5mV	N/A	10%	N/A	75	N/A	40V	14 Pin Plastic DIP 14 Pin Cerdip
EP2015A	Monolithic, D.I. Precision Matched Quad PNP Transistor Array	−55 to 125°C	1mV	2mV	5%	10%	150	100	40V	14 Pin Cerdip
EP2015AC		−25 to 85°C	1mV	2mV	10%	20%	150	100	40V	14 Pin Plastic DIP 14 Pin Cerdip
EN2016	Monolithic, D.I. Matched Quad NPN Transistor Array	−55 to 125°C	5mV	10mV	10%	20%	75	50	40V	14 Pin Cerdip
EN2016C		25°C	5mV	N/A	10%	N/A	75	N/A	40V	14 Pin Plastic DIP 14 Pin Cerdip
EN2016A	Monolithic, D.I. Precision Matched Quad NPN Transistor Array	−55 to 125°C	1mV	2mV	5%	10%	150	100	40V	14 Pin Cerdip
EN2016AC		−25 to 85°C	1mV	2mV	10%	20%	150	100	40V	14 Pin Plastic DIP 14 Pin Cerdip

élantec
HIGH PERFORMANCE ANALOG INTEGRATED CIRCUITS

EP2015/2015A
Fast Quad PNP Array

Features
- Four Independent Fast PNP's
- 350 MHz f_t
- Tight V_{be} Matching—1 mV
- Tight H_{fe} Matching—5%
- One Chip Construction With Dielectric Isolation
- Excellent Thermal Tracking
- High H_{fe}—150 Minimum
- 40 Volt Minimum BV_{ceo}
- Each Transistor Similar to 2N3906
- Pin Compatible With TPQ3906 and MPQ3906

Applications
- Current Sources
- Current Mirrors
- Log Amplifiers
- Multipliers

Ordering Information

Part No.	Temp. Range	Pkg.	Outline#
EP2015CN	25°C	P-DIP	MDP0012
EP2015ACN	−25 to +85°C	P-DIP	MDP0012
EP2015CJ	25°C	Cerdip	MDP0014
EP2015ACJ	−25 to +85°C	Cerdip	MDP0014
EP2015J	−55 to +125°C	Cerdip	MDP0014
EP2015AJ	−55 to +125°C	Cerdip	MDP0014
EP2015J-8	−55 to +125°C	Cerdip	MDP0014
EP2015AJ-8	−55 to +125°C	Cerdip	MDP0014

Connection Diagram

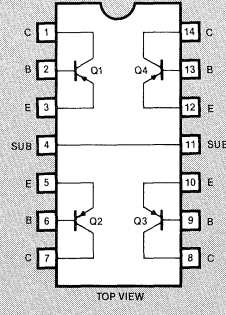

TOP VIEW

General Description
The EP2015 family are quad monolithic vertical PNP transistor arrays which offer excellent parametric matching and high speed performance. The 350 MHz f_t provides A.C. performance similar to 2N3906 class devices. Manufactured on Elantec's Dielectric Isolation process, these transistors are electrically isolated from each other by a layer of oxide. The resulting low collector to substrate capacitance allows very high speed performance with minimal crosstalk. In addition, complete D.C. isolation is achieved. Substrate biasing is not required for normal operation, however for optimum high speed performance the substrate should be grounded. One-chip construction insures excellent parameter matching and tracking over temperature.

The low cost EP2015C is specified at 25°C. The EP2015AC is more tightly specified and guaranteed over the commercial temperature range of −25°C to +85°C. The EP2015 and the more stringently specified EP2015A are tested over the full military temperature range of −55°C to +125°C. The EP2015C and EP2015AC are available in either 14 pin plastic dual-in-line or ceramic dual-in-line packages. The EP2015 and EP2015A are available in a 14 pin ceramic dual-in-line package. The EP2015 is also available in chip form for hybrid applications. Its large bonding pads provide for easy automated manufacturing.

For information on a complementary NPN transistor array, see Elantec's EN2016 family data sheet.

Elantec facilities comply with MIL-I-45208A and other applicable quality specifications. For information on Elantec's military processing, request our brochure: *Elantec's Military Processing—Monolithic Products.*

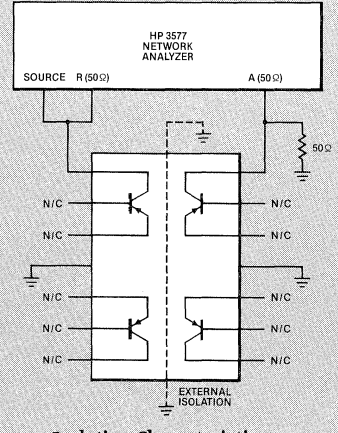

Isolation Characteristics Test Circuit

Die Layout

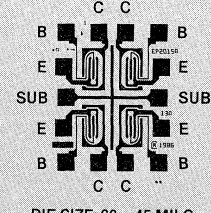

DIE SIZE: 38 × 45 MILS

EP2015/2015A
Fast Quad PNP Array

Absolute Maximum Ratings

P_D	Power Dissipation	
	Each Transistor	500 mW (T_A=25°C)
	Total Package	1.25 W (T_A=25°C)
T_A	Operating Temperature Range:	
	EP2015A/EP2015	−55°C to +125°C
	EP2015C/EP2015AC	−25°C to +85°C
T_{ST}	Storage Temperature	−65°C to +150°C
	Maximum Junction Temperature	150°C
	Lead Temperature (soldering, <10 seconds)	+300°C

V_{CB} max	40 V
V_{EB} max	5 V
V_{CE} max	40 V
I_C max	50 mA
I_B max	10 mA

Important Note: All parameters having Min./Max. specifications are guaranteed. The Test Level column indicates the specific device testing actually performed during production and Quality Assurance inspection. Elantec performs most electrical tests using modern high-speed automatic test equipment, specifically the LTX 77 Series system. Unless otherwise noted, all tests are pulsed tests, therefore $T_J = T_C = T_A$.

Test Level — **Test Procedure**

I 100% production tested and QA sample tested per QA test plan QCX0002.

II 100% production tested at T_A=25°C, and QA sample tested at T_A=25°C, T_{MAX} and T_{MIN} per QA test plan QCX0002.

III QA sample tested per QA test plan QCX0002.

IV Parameter is guaranteed (but not tested) by Design and Characterization Data.

V Parameter is typical value for information purposes only.

Electrical Characteristics

Parameter	Test Conditions	EP2015 Min.	EP2015 Typ.	EP2015 Max.	EP2015 Test Level	EP2015C Min.	EP2015C Typ.	EP2015C Max.	EP2015C Test Level	Units
ΔV_{BE} (Note 1)	V_{CE}=4 V, I_C=1 mA, T_A=25°C			5	I			5	I	mV
	$T_{MIN} < T_A < T_{MAX}$			10	I					mV
ΔH_{fe1} (Note 2)	V_{CE}=1 V, I_C=0.1 mA, T_A=25°C			10	I			10	I	%
	$T_{MIN} < T_A < T_{MAX}$			20	I					%
ΔH_{fe2} (Note 2)	V_{CE}=1 V, I_C=1 mA, T_A=25°C			10	I			10	I	%
	$T_{MIN} < T_A < T_{MAX}$			20	I					%
ΔH_{fe3} (Note 2)	V_{CE}=1 V, I_C=10 mA, T_A=25°C			10	I			10	I	%
	$T_{MIN} < T_A < T_{MAX}$			20	I					%
H_{fe1} (Note 3)	V_{CE}=1 V, I_C=0.1 mA, T_A=25°C	75			I	75			I	
	$T_{MIN} < T_A < T_{MAX}$	50			I					
H_{fe2} (Note 3)	V_{CE}=1 V, I_C=1.0 mA, T_A=25°C	75			I	75			I	
	$T_{MIN} < T_A < T_{MAX}$	50			I					

EP2015/2015A
Fast Quad PNP Array

Electrical Characteristics — (Continued)

Parameter	Test Conditions	EP2015 Min.	EP2015 Typ.	EP2015 Max.	EP2015 Test Level	EP2015C Min.	EP2015C Typ.	EP2015C Max.	EP2015C Test Level	Units
H_{fe3} (Note 3)	V_{CE}=1V, I_C=10mA T_A=25°C	75			I	75			I	
	T_{MIN}<T_A<T_{MAX}	50			I					
V_{BEsat}	I_C=10mA, I_B=1mA T_A=25°C			0.90	I			0.90	I	V
	T_{MIN}<T_A<T_{MAX}			1.10	I					V
V_{CEsat}	I_C=10mA, I_B=1mA T_A=25°C			0.20	I			0.20	I	V
	T_{MIN}<T_A<T_{MAX}			0.30	I					V
BV_{ceo}	I_C=1mA, I_B=0mA T_A=25°C	40			I	40			I	V
	T_{MIN}<T_A<T_{MAX}	40			I					V
BV_{cbo}	I_C=10μA, I_E=0mA T_A=25°C	40			I	40			I	V
	T_{MIN}<T_A<T_{MAX}	40			I					V
BV_{ebo}	I_B=10μA, I_C=0mA T_A=25°C	5			I	5			I	V
	T_{MIN}<T_A<T_{MAX}	5			I					V
I_{cbo}	V_{CB}=30V, I_E=0mA T_A=25°C			50	I			50	I	nA
	T_{MIN}<T_A<T_{MAX}			50	I					nA
I_{ebo}	V_{CE}=4V, I_C=0mA T_A=25°C			50	I			50	I	nA
	T_{MIN}<T_A<T_{MAX}			50	I					nA
f_t	V_{CE}=20V, I_C=10mA T_A=25°C		350		V		350		V	MHz
r_{BE} (Note 4)	10μA<I_C<2mA T_A=25°C		1		V		1		V	Ω

Electrical Characteristics — (Continued)

Parameter	Test Conditions	EP2015A				EP2015AC				Units
		Min.	Typ.	Max.	Test Level	Min.	Typ.	Max.	Test Level	
ΔV_{BE} (Note 1)	V_{CE}=4 V, I_C=1 mA T_A=25°C			1	I			1	I	mV
	$T_{MIN}<T_A<T_{MAX}$			2	I			2	III	mV
ΔH_{fe1} (Note 2)	V_{CE}=1 V, I_C=0.1 mA T_A=25°C			5	I			5	I	%
	$T_{MIN}<T_A<T_{MAX}$			10	I			10	III	%
ΔH_{fe2} (Note 2)	V_{CE}=1 V, I_C=1 mA T_A=25°C			5	I			5	I	%
	$T_{MIN}<T_A<T_{MAX}$			10	I			10	III	%
ΔH_{fe3} (Note 2)	V_{CE}=1 V, I_C=10 mA T_A=25°C			5	I			5	I	%
	$T_{MIN}<T_A<T_{MAX}$			10	I			10	III	%
H_{fe1} (Note 3)	V_{CE}=1 V, I_C=0.1 mA T_A=25°C	150			I	150			I	
	$T_{MIN}<T_A<T_{MAX}$	100			I	100			III	
H_{fe2} (Note 3)	V_{CE}=1 V, I_C=1.0 mA T_A=25°C	150			I	150			I	
	$T_{MIN}<T_A<T_{MAX}$	100			I	100			III	
H_{fe3} (Note 3)	V_{CE}=1 V, I_C=10 mA T_A=25°C	100			I	100			I	
	$T_{MIN}<T_A<T_{MAX}$	75			I	75			III	
V_{BEsat}	I_C=10 mA, I_B=1 mA T_A=25°C			0.90	I			0.90	I	V
	$T_{MIN}<T_A<T_{MAX}$			1.10	I			1.10	III	V
V_{CEsat}	I_C=10 mA, I_B=1 mA T_A=25°C			0.20	I			0.20	I	V
	$T_{MIN}<T_A<T_{MAX}$			0.30	I			0.30	III	V
BV_{ceo}	I_C=1 mA, I_B=0 mA T_A=25°C	40			I	40			I	V
	$T_{MIN}<T_A<T_{MAX}$	40			I	40			III	V
BV_{cbo}	I_C=10 μA, I_E=0 mA T_A=25°C	40			I	40			I	V
	$T_{MIN}<T_A<T_{MAX}$	40			I	40			III	V

EP2015/2015A
Fast Quad PNP Array

Electrical Characteristics — (Continued)

Parameter	Test Conditions	EP2015A Min.	EP2015A Typ.	EP2015A Max.	EP2015A Test Level	EP2015AC Min.	EP2015AC Typ.	EP2015AC Max.	EP2015AC Test Level	Units
BV_{ebo}	$I_B=10\mu A$, $I_C=0mA$, $T_A=25°C$	5			I	5			I	V
	$T_{MIN}<T_A<T_{MAX}$	5			I	5			III	V
I_{cbo}	$V_{CB}=30V$, $I_E=0mA$, $T_A=25°C$			50	I			50	I	nA
	$T_{MIN}<T_A<T_{MAX}$			50	I			50	III	nA
I_{ebo}	$V_{CE}=4V$, $I_C=0mA$, $T_A=25°C$			50	I			50	I	nA
	$T_{MIN}<T_A<T_{MAX}$			50	I			50	III	nA
f_t	$V_{CE}=20V$, $I_C=10mA$, $T_A=25°C$		350		V		350		V	MHz
r_{BE} (Note 4)	$10\mu A<I_C<2mA$, $T_A=25°C$		1		V		1		V	Ω

Note 1: ΔV_{BE} and ΔH_{FE} are measured between each of six possible pairs of transistors.
Note 2: ΔH_{FE} is calculated based on the difference divided by the larger of the two readings.
Note 3: Applies to all four transistors.
Note 4: Estimated from log conformity.

Typical Performance Curves

Current Noise

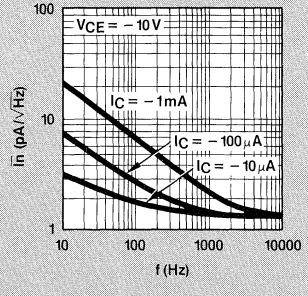

Voltage Noise

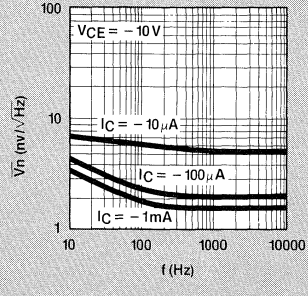

C_{BE}, C_{CSUB}, C_{CB} vs. Voltage

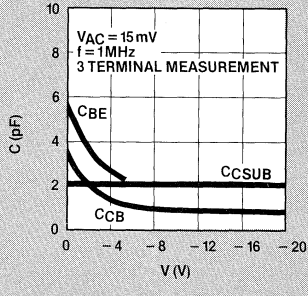

f_t vs. I_C

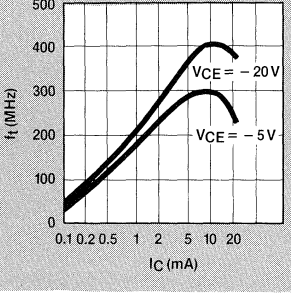

T_{DELAY} and T_{ON} vs. I_C

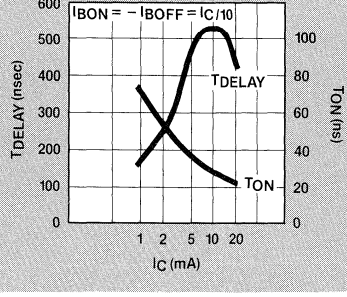

$V_{CE\ SAT}$ vs. I_B

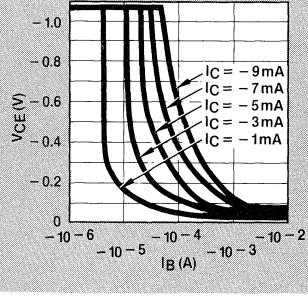

Typical Performance Curves — (Continued)

Junction Leakages

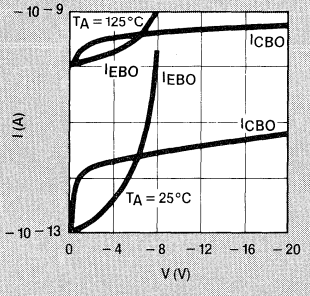

I_B and I_C vs. V_{BE}

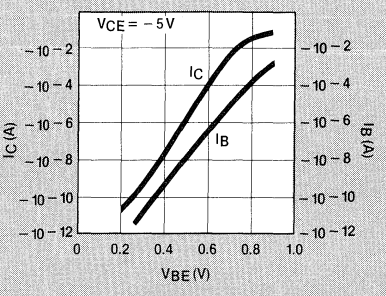

V_{CE} vs. I_C

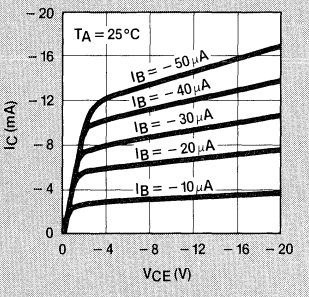

H_{fe} vs. I_C

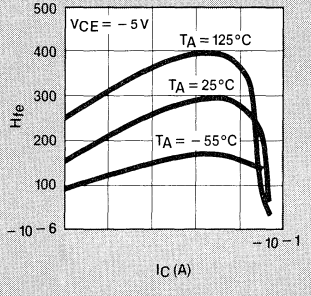

H_{fe} vs. I_C

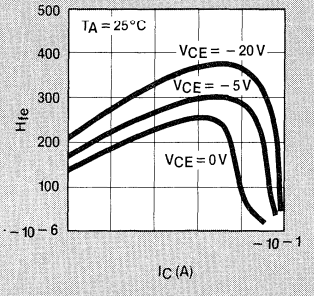

Isolation Characteristics

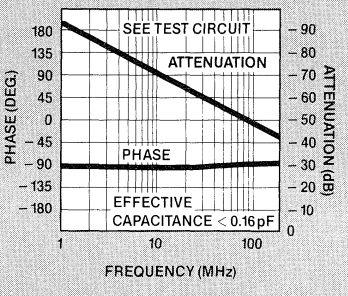

EP2015 PSPICE™ Model

IS=8E−15 BF=300 VA=47 IK=0.03 XTB=1.3 BR=4.5 TF=0.3N TR=280N RB=230 RC=170 ISE=1E−15 NE=1.24 CCS=2P MS=0 CJC=3.7P PC=0.5 MC=0.45 CJE=5.4P PE=0.6 ME=0.33 PTF=15

Note that for the above model the maximum "soft" saturation collector RC is used. For "hard" saturation modeling set RC≈9.

PSPICE is a registered trademark of MicroSim Corporation.

Current Sources and Current Mirrors

Current sinks and current mirrors have long been a tool available to the designer of monolithic ICs. Matched NPN transistors have allowed system designers to make NPN current sinks. Now for the first time Elantec's fast matched PNP transistors are available. These make excellent, fast, matched current sources. The advantages of using current sources as active loads, instead of pullup resistors include:

- Faster, linear pull up (Not exponential)
- High output resistance (This increases voltage gain in many applications)

The Norton and Thevenin equivalent circuits of a current source are:

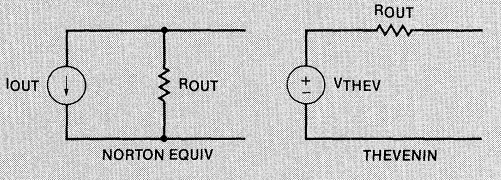

AND $V_{THEV} = I_{OUT} \times R_{OUT}$

Four examples of current mirrors are shown, along with some of the advantages and limitations of each topology. For a more thorough discussion see "Analysis and Design of Analog Integrated Circuits" by Grey & Meyer (Wiley 1984), pages 233–247.

All current sources are only as good as the transistors that make them. If the transistors' V_{BE} match is 5mV the output current would have a 20% error.

All of the current sources shown can be improved by putting a resistor in series with the topmost emitters. A 250mV drop across these resistors reduces a 5mV V_{BE} mismatch to a 2% current error. This has the added benefit of increasing output resistance. Elantec can guarantee a 1mV V_{BE} match so resistors may not be necessary.

Basic Current Source

The Basic Current Mirror is simple and works well at low currents. Its limitations are low output resistance and it is not as fast as the Wilson.

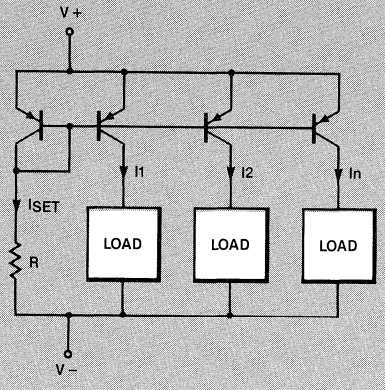

$$I_{SET} \approx \frac{((V+)-(V-))-V_{BE}}{R}$$

$$I1 = I2 = In = \frac{\beta\, I1}{\beta + n + 1}$$

$$R_{OUT} = \frac{V_A}{I_{OUT}} = \frac{\text{EARLY VOLTAGE}}{I_{OUT}} = r_o$$

PNP Wilson Current Mirror

The Wilson is the best Current Mirror for high frequency applications, and it has plenty of output resistance.

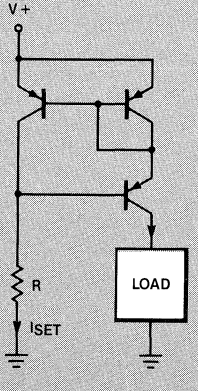

$$I_{OUT} \approx I_{REF}\left(1 - \frac{2}{\beta^2 + 2\beta + 2}\right)$$

$$R_{OUT} \approx \frac{\beta\, r_o}{2}$$

$$V_{THEV} \approx \frac{\beta\, V_A}{2}$$

Precision Current Source

The Precision Current Source has excellent current match since the error reduction is proportional to β^2. It is slow to turn off since it has no base turn off current. The turn off speed can be increased by using R_X, at the expense of reduced accuracy.

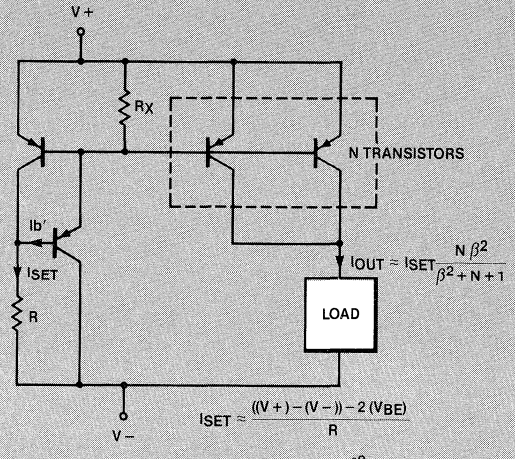

$$I_{SET} \approx \frac{((V+)-(V-))-2\,(V_{BE})}{R}$$

$$I_{OUT} \approx I_{SET}\frac{N\,\beta^2}{\beta^2 + N + 1}$$

$$R_{OUT} = \frac{V_A}{I_{OUT}}$$

Cascode Current Source

The Cascode Current Source is a basic current mirror with a common base transistor in the collector. This makes V_{CE} relatively constant for the mirror transistors and greatly increases the output resistance. This has good high frequency characteristics. Note that Q4 and Q5 can be in a package separate from Q1, Q2 and Q3.

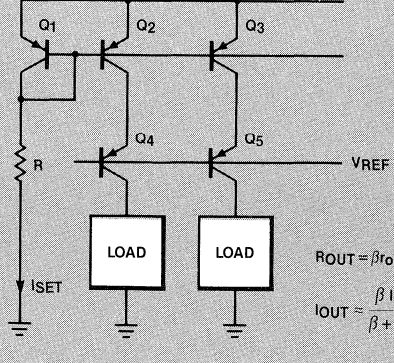

$$R_{OUT} = \beta r_o$$

$$I_{OUT} \approx \frac{\beta\, I_{SET}}{\beta + n + 1}$$

élantec
HIGH PERFORMANCE ANALOG INTEGRATED CIRCUITS

EN2016/EN2016A
Fast Quad NPN Array

Features
- Four Independent Fast NPN's
- 350MHz f_t
- Tight V_{be} Matching—1 mV
- Tight H_{fe} Matching—5%
- One Chip Construction With Dielectric Isolation
- Excellent Thermal Tracking
- High H_{fe}—150 Minimum
- 40 Volt Minimum BV_{ceo}
- Each Transistor Similar to 2N3904
- Pin Compatible With TPQ3904 and MPQ3904

Applications
- Current Sources
- Current Mirrors
- Log Amplifiers
- Multipliers

Ordering Information

Part No.	Temp. Range	Pkg.	Outline#
EN2016CN	25°C	P-DIP	MDP0012
EN2016ACN	-25 to +85°C	P-DIP	MDP0012
EN2016CJ	25°C	Cerdip	MDP0014
EN2016ACJ	-25 to +85°C	Cerdip	MDP0014
EN2016J	-55 to +125°C	Cerdip	MDP0014
EN2016AJ	-55 to +125°C	Cerdip	MDP0014
EN2016J-8	-55 to +125°C	Cerdip	MDP0014
EN2016AJ-8	-55 to +125°C	Cerdip	MDP0014

Connection Diagram

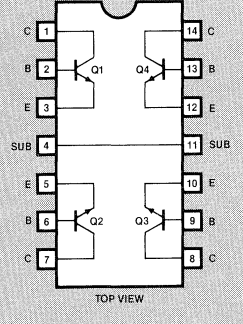

TOP VIEW

General Description
The EN2016 family are quad monolithic vertical NPN transistor arrays which offer excellent parametric matching and high speed performance. The 350MHz f_t provides A.C. performance similar to 2N3904 class devices. Manufactured on Elantec's Dielectric Isolation process, these transistors are electrically isolated from each other by a layer of oxide. The resulting low collector to substrate capacitance allows very high speed performance with minimal crosstalk. In addition, complete D.C. isolation is achieved. Substrate biasing is not required for normal operation, however for optimum high speed performance the substrate should be grounded. One-chip construction insures excellent parameter matching and tracking over temperature.

The low cost EN2016C is specified at 25°C. The EN2016AC is more tightly specified and guaranteed over the commercial temperature range of −25°C to +85°C. The EN2016 and the more stringently specified EN2016A are tested over the full military temperature range of −55°C to +125°C. The EN2016C and EN2016AC are available in either 14 pin plastic dual-in-line or ceramic dual-in-line packages. The EN2016 and EN2016A are available in a 14 pin ceramic dual-in-line package. The EN2016 is also available in chip form for hybrid applications. Its large bonding pads provide for easy automated manufacturing.

For information on a complementary PNP transistor array, see Elantec's EP2015 family data sheet.

Elantec facilities comply with MIL-I-45208A and other applicable quality specifications. For information on Elantec's military processing, request our brochure: *Elantec's Military Processing—Monolithic Products.*

DECEMBER, 1986 REV. A



TM

Solenoid/ Relay Drivers

élantec

HIGH PERFORMANCE ANALOG INTEGRATED CIRCUITS

ELANTEC Part Number	Description	V_{CC} Range	Max. Supply Current "OFF"	Max. Supply Current "ON"	Peak Output Current	Voltage Drop at I_{out} ΔV	Voltage Drop at I_{out} @I_{OUT}	T_{ON} Max.	T_{OFF} Max.	Temp. Range	Packages
EDH0006	Hybrid Power Digital Driver TTL Level Inputs.	+10 V to +45 V	2 mA	8 mA	3 Amps	2.0 V Max 1.5 V Max	1.6 Amps 800 mA	600 ns	5.2 μsec	−55 to +125°C 0 to 70°C	10 lead TO-5
EDH0008	Hybrid Power Digital Driver TTL Level Inputs.	+10 V to +45 V	2 mA	8 mA	1.5 Amps	1.5 V Max 1.2 V Max	400 mA 150 mA	1 μsec	10 μsec	−55 to +125°C 0 to 70°C	10 lead TO-5

EDH0006/EDH0006C

1.5 Amp, High Voltage Driver

Features

- Single Supply Operation: +10 V to +45 V
- Low Standby Power Dissipation: 35 mW
- 1.5 A, 50 ms, Pulse Current Capability
- Direct Replacement for DH0006H

Applications

- Lamp drivers
- Solenoid actuators
- Squib igniters
- Relay drivers

Ordering Information

Part No.	Temp. Range	Outline#
EDH0006CH	0 to +70°C	MDP0009
EDH0006H	−55 to +125°C	MDP0009
EDH0006H/883	−55 to +125°C	MDP0009

Connection Diagram

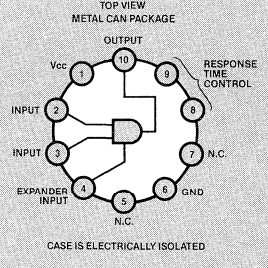

CASE IS ELECTRICALLY ISOLATED

General Description

The EDH0006 is a high voltage, high current driver designed to accept standard DTL or TTL logic levels and drive a load of up to 400 mA at 28 Volts. AND inputs are provided along with an expander connection, should additional gating be required. The addition of an external capacitor provides control of the rise and fall times of the output in order to decrease cold lamp surge currents or to minimize electromagnetic interference if long lines are driven.

The EDH0006 is constructed using Elantec's proprietary monolithic control chip plus discrete power transistors in a hybrid thick film assembly.

The EDH0006 is specified for operation over the −55°C to +125°C military temperature range. The EDH0006C is specified for operation over the 0°C to +70°C temperature range. Both devices are available in a 10-lead metal can package.

Elantec facilities comply with MIL-I-45208A, and other applicable quality specifications. Elantec's military devices are manufactured and tested in our MIL-STD-1772A certified facility in Milpitas, California.

For additional information on Elantec's quality and Reliability Assurance policy and procedures request brochure QRA–1.

Equivalent Schematic

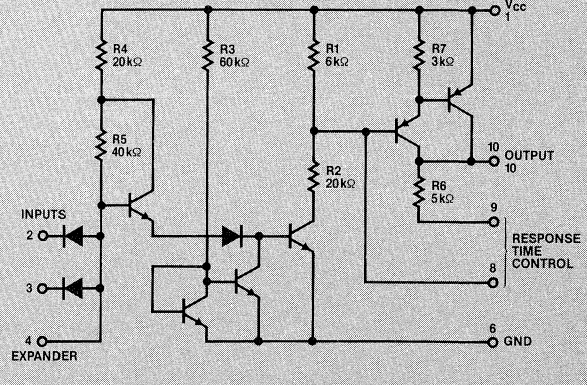

REV A JUNE 1986

EDH0006/EDH0006C

1.5 Amp, High Voltage Driver

Absolute Maximum Ratings

V_S	Supply Voltage (for <100 ms)	60 V	T_A	Operating Temperature Range	
V_S	Continuous Supply Voltage	45 V		EDH0006	−55°C to +125°C
V_{in}	Input Voltage	5.5 V		EDH0006C	0°C to +70°C
Ix	Input expander current	5 mA	T_S	Storage Temperature Range	
I_{out}	Peak Output Current			All Devices	−65°C to +150°C
	(50 mS on/1 sec off)	1.5 A		Lead Temperature	260°C
P_D	Power Dissipation at 25°C	750 mW		(soldering <10 seconds)	
	(derate 200°C/W above 25°C)				

Important Note: **All parameters having Min./Max. specifications are guaranteed. The test level indicates the device testing actually performed during production and quality assurance inspection. Elantec performs most electrical tests using modern high-speed automatic test equipment, specifically the LTX 77 Series system. Unless otherwise noted, all tests are pulsed tests, therefore $T_J = T_C = T_A$.**

Test Level	Test Procedure
I	100% production tested and QA sample tested per QA test plan QCX0002.
II	100% production tested at $T_A = 25°C$, and QA sample tested at $T_A = 25°C$, T_{MAX} and T_{MIN} per QA test plan QCX0002.
III	QA sample tested per QA test plan QCX0002.
IV	Parameter is guaranteed (but not tested) by Design and Characterization Data.
V	Parameter is typical value at $T_A = 25°C$ for information purposes only.

DC Electrical Characteristics $T_{min} \leq T_A \leq T_{max}$ unless otherwise specified

	Parameter	Test Conditions	Min.	Typ.	Max.	Test Level	Units
V_{IH}	Logical "1" Input Voltage	$V_{CC} = 10$ V to 45 V	2.0			I	V
V_{IL}	Logical "0" Input Voltage	$V_{CC} = 10$ V to 45 V			0.8	I	V
V_{OH}	Logical "1" Output Voltage	$V_{CC} = 28$ V, $V_{in} = 2.0$ V, $I_{out} = 400$ mA	26.5	27.0		I	V
V_{OH}	Logical "1" Output Voltage	$V_{CC} = 10$ V, $V_{in} = 2.0$ V, $I_{out} = 150$ mA	8.8	9.2		I	V
V_{OL}	Logical "0" Output Voltage	$V_{CC} = 45$ V, $V_{in} = 0.8$ V, RL = 1 kΩ		1	10	I	mV
I_{IL}	Logical "0" Input Current	$V_{CC} = 45$ V, $V_{in} = 0.4$ V		0.8	1.0	I	mA
I_{IH}	Logical "1" Input current	$V_{CC} = 45$ V, $V_{in} = 2.4$ V		0.5	5.0	I	μA
I_{IH}	Logical "1" Input Current	$V_{CC} = 45$ V, $V_{in} = 5.5$ V			100	I	μA
B_{VIN}	Input Breakdown Voltage		5.5			I	V
$I_{cc\ off}$	"Off" Power Supply Current	$V_{CC} = 45$ V, $V_{in} = 0.8$ V			2	I	mA
$I_{cc\ on}$	"On" Power supply Current	$V_{CC} = 45$ V, $V_{in} = 2.0$ V, $I_{out} = 0$ mA			8	I	mA
t_r	Rise Time	Note 1		100	300	I	ns
t_f	Fall Time	Note 1		800	1500	I	ns
T_{on}	Turn on time	Note 1		260	600	I	ns
T_{off}	Turn off time	Note 1		2.2	5.2	I	μs

Note 1: $V_{CC} = 28$ V, $R_L = 82\ \Omega$, $C_L = 10$ pF, $V_{in} = 0$ to 3.0 V pulse, $T_r \leq 10$ ns, $T_A = 25°C$

EDH0008/EDH0008C

3 Amp, High Voltage, High Current Driver

Features

- Single Supply Operation: +10 V to +45 V
- Low Standby Power Dissipation: 35 mW
- 3 A, 50 ms, Pulse Current Capability
- Direct Replacement for DH0008H

Applications

- Lamp drivers
- Solenoid actuators
- Squib igniters
- Relay drivers

Ordering Information

Part No.	Temp. Range	Outline#
EDH0008CH	0 to +70°C	MDP0009
EDH0008H	−55 to +125°C	MDP0009
EDH0008H/883	−55 to +125°C	MDP0009

Connection Diagram

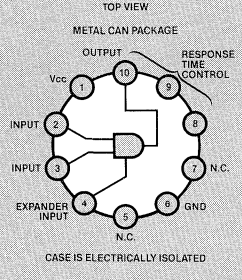

CASE IS ELECTRICALLY ISOLATED

General Description

The EDH0008 is a high voltage, high current driver designed to accept standard TTL or DTL logic levels and drive a pulsed load of up to 3 A from a continuous supply up to 45 volts. AND inputs are provided along with an expander connection, should the additional gating be desired.

The high pulse current capability makes the EDH0008 ideal for driving non-linear resistive loads such as incandescent lamps. The addition of an external capacitor provides control of the rise and fall times of the output in order to decrease cold lamp surge currents.

The EDH0008 is constructed using Elantec's proprietary monolithic control chip plus discrete power transistors in a hybrid thick film assembly.

The EDH0008 is specified for operation over the −55°C to +125°C military temperature range. The EDH0008C is specified over the 0°C to +70°C temperature range. Both devices are available in a 10 lead metal can package.

Elantec facilities comply with MIL-I-45208A and other applicable quality specifications. Elantec's military devices are manufactured and tested in our MIL-STD-1772 certified facility in Milpitas, California.

For additional information on Elantec's quality and reliability assurance policy and procedures, please request brochure QRA-1.

Equivalent Schematic

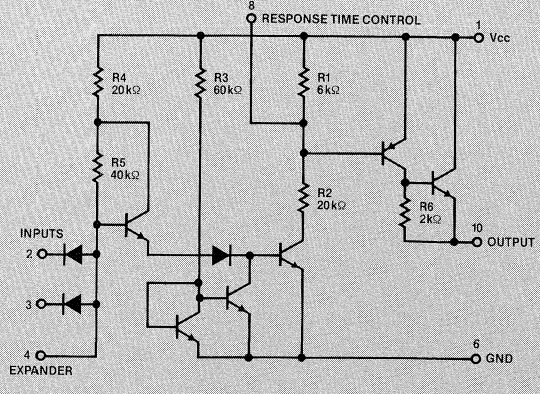

EDH0008/EDH0008C

3 Amp, High Voltage, High Current Driver

Absolute Maximum Ratings

V_S	Supply Voltage (for <100 ms)	60 V	T_A	Operating Temperature Range	
V_S	Continuous Supply Voltage	45 V		EDH0008	−55°C to +125°C
V_{in}	Input Voltage	5.5 V		EDH0008C	0°C to +70°C
Ix	Input Expander Current	5 mA	T_S	Storage Temperature Range	
I_{out}	Peak Output Current			All Devices	−65°C to +150°C
	(50 mS on/1 sec off)	3 A		Lead Temperature	
P_D	Power Dissipation			(soldering <10 seconds)	260°C
	(derate 158°C/W above 25°C)	950 mW			

Important Note: **All parameters having Min./Max. specifications are guaranteed. The Test Level indicates the device testing actually performed during production and quality assurance inspection. Elantec performs most electrical tests using modern high-speed automatic test equipment, specifically the LTX 77 Series system. Unless otherwise noted, all tests are pulsed tests, therefore $T_J = T_C = T_A$.**

Test Level	Test Procedure
I	100% production tested and QA sample tested per QA test plan QCX0002.
II	100% production tested at $T_A = 25°C$, and QA sample tested at $T_A = 25°C$, T_{MAX} and T_{MIN} per QA test plan QCX0002.
III	QA sample tested per QA test plan QCX0002.
IV	Parameter is guaranteed (but not tested) by Design and Characterization Data.
V	Parameter is typical value at $T_A = 25°C$ for information purposes only.

DC Electrical Characteristics $T_{min} \leq T_A \leq T_{max}$ unless otherwise specified

	Parameter	Test Conditions	Min.	Typ.	Max.	Test Level	Units
V_{IH}	Logical "1" Input Voltage	V_{CC}=10 V to 45 V	2.0			I	V
V_{IL}	Logical "0" Input Voltage	V_{CC}=10 V to 45 V			0.8	I	V
V_{OH}	Logical "1" Output Voltage	V_{CC}=28 V, V_{in}=2.0 V, I_{out}=800 mA	26.5	27.0		I	V
V_{OH}	Logical "1" Output Voltage	V_{CC}=45 V, V_{in}=2.0 V, I_{out}=1.6 A	43	43.5		I	V
V_{OL}	Logical "0" Output Voltage	V_{CC}=45 V, V_{in}=0.8 V, RL=1 kΩ		20	100	I	mV
I_{IL}	Logical "0" Input Current	V_{CC}=45 V, V_{in}=0.4 V		−0.8	−1.0	I	mA
I_{IH}	Logical "1" Input current	V_{CC}=45 V, V_{in}=2.4 V		0.5	5.0	I	μA
I_{IH}	Logical "1" Input Current	V_{CC}=45 V, V_{in}=5.5 V			100	I	μA
B_{VIN}	Input Breakdown Voltage		5.5			I	V
$I_{cc\ off}$	"Off" Power Supply Current	V_{CC}=45 V, V_{in}=0 V			2	I	mA
$I_{cc\ on}$	"On" Power Supply Current	V_{CC}=45 V, V_{in}=2.0 V, I_{out}=0 mA			8	I	mA
t_r	Rise Time	Note 1		200	500	I	ns
t_f	Fall Time	Note 1		3.0	4	I	μs
T_{on}	Turn on time	Note 1		0.4	1	I	μs
T_{off}	Turn off time	Note 1		7	10	I	μs

Note 1: V_{CC}=28 V, R_L=39 Ω, C_L=10 pF, V_{in}=0–5.0 V pulse, $T_r \leq 10$ ns, T_A=25°C

Summary of Elantec's Reliability and Quality Assurance Policy and Procedures QRA–1 Rev. A September, 1986

Forward

This document summarizes Elantec's philosophy and policies towards Quality Assurance and Reliability for both MIL-STD-883 and commercial products. It is intended as an overview only, to give the reader a quick visualization of Elantec's capabilities and standard procedures.

Customers wishing more detail should refer to either "QRA-2, Elantec's Military Processing, Monolithic Integrated Circuits" or "QRA-3, Elantec 883B program for Hybird Integrated Circuits", or contact us at the factory. Our facilities and process documentation are available for customer inspection at any time. We welcome you to visit us at your earliest convenience, as we believe our factory to be "our best salesman".

Philosophy

Elantec was founded on the principle of supplying Analog Integrated Circuits of advanced performance to levels of quality beyond that normally available from the semiconductor industry. Our product range has been intentionally limited to service commercial, industrial and Military/Aerospace applications only. It is our firm belief that by placing quality and reliability over all other objectives that we will achieve our goal of providing our customers maximum cost-effectiveness and long term satisfaction.

Using both monolithic and hybrid technologies, Elantec provides leading edge Analog Integrated Circuit devices whose performance routinely exceeds that of most commercial manufacturers.

It is our policy to insure that each and every device is:

1) Designed to provide maximum long-term reliability.
2) Manufactured in strict compliance with thoroughly documented procedures in a tightly controlled environment.
3) Tested to insure each and every device meets each parameter as specified on the data sheet or customer specification.
4) Covered by a rigorous regularly scheduled Quality and Reliability Audit Program.

Military/Aerospace Program Summary

Elantec:

- Provides product screened and quality performance tested in accordance with Revision C of MIL-STD-883.
- Is an approved supplier to D.E.S.C. drawing numbers:

  78013–similar to ELH0002H/883B
  80013–similar to ELH0032G/883B
  80014–similar to ELH0033G/883B
  85087–similar to ELH0041G/883B
  85088–similar to ELH0021K/883B
  85089–similar to ELH0101K/883B or ELH0101AK/883B

- Maintains an on-going product qualification and reliability monitor program. Current quality conformance data is always available to support military product.
- Manufactures our MIL-STD-883 Revision C Hybrid products 100% in the United States in our facility in Milpitas, California.
- Specifies clearly on each data sheet exactly which parameters are 100% tested, Q.A. sampled, or guaranteed by design and characterization.
- Performs 100% A.C. testing of critical performance parameters (see individual data sheets).
- Operates to extremely tight AQL sampling plans (see Table I).
- Facilities have been surveyed and approved by most of the major military/aerospace customers—names available upon request.
- Maintains complete traceability and manufacturing history on each production lot.
- Has been audited and certified by D.E.S.C. to MIL-STD-1772.
- Maintains shelf stock on MIL-STD-883 product for rapid delivery at competitive prices.
- Welcomes customer Source Control Drawings, special selections and custom reliability processing.

Commercial Program Summary

Elantec:

- Provides the most thoroughly tested product available.
- Specifies clearly on each data sheet exactly which parameters are 100% tested, Q.A. sampled, or guaranteed by design and characterization.
- Performs 100% A.C. testing of critical performance parameters (see individual data sheets).
- Operates to extremely tight AQL sampling plans (see Table I).
- Provides 100% Temperature Cycling, Centrifuge, Fine and Gross Leak checks on all hermetic package commercial devices (see Table II).
- Provides a standard burn-in program—"/E+"—for commercial devices.

- Uses superior manufacturing process for hybrid devices to eliminate failure modes inherent in conventional assembly techniques.
- Maintains traceability on production lots.
- Manufactures all thick film substrates and does all final electrical testing of commercial devices 100% in our Milpitas, California facility.

Facility

All military hybrid product manufactured by Elantec is completely built in the U.S.A. at our factory in Milpitas, California. Military monolithic product may be assembled onshore or offshore, however all testing is performed in Milpitas. Commercial product thick film processing and all electrical testing is also done in Milpitas. Commercial assembly may be done either in Milpitas or offshore.

The Milpitas factory has been certified by many customers to meet the requirements of MIL-Q-9858. Defense Electronics Supply Center (DESC) has performed an audit and certified Elantec to the Hybrid Line Certification Specification, MIL-STD-1772.

The factory has 16,000 square feet of space. 5000 square feet is a Class 1000 clean room (Fed. Std 209B) where assembly and electrical test are performed. All assembly operations are done under Class 100 laminar flow hoods. Temperature and humidity are monitored and controlled in accordance with MIL-STD-883. Gases are filtered at point of use. De-ionized water is filtered and bacteria controlled, and resistivity is continuously monitored. All semiconductor work-in-process is stored in nitrogen-purged dessicators.

A comprehensive ESD program is in effect. All work surfaces are either stainless steel or conductive laminate. Every work surface is grounded for Electrostatic Discharge protection in accordance with OSHA requirements. Shelving at all inventory locations is grounded. Floors in all manufacturing and inventory areas are covered with conductive tile attached with conductive tile cement. Conductive heel straps are worn by all operators. All product, commercial and military, is marked with an equalateral triangle to indicate static sensitivity in accordance with MIL-M-38510. Finished product is pakaged in anti-static materials which are competely shielded by aluminum-lined boxes or conductive bags.

Elantec maintains complete *in-house* capability to 100% process devices to the requirements of MIL-STD-883 Rev C Class B. Additional in-house capability includes Particle Impact Noise Detection (PIND). All testing for initial product qualification and periodic quality conformance is performed in-house except for moisture resistance, internal water vapor, mechanical shock and vibration which are performed at DESC certified laboratories.

All manufacturing equipment is calibrated in accordance with MIL-STD-45662 as modified by Appendix A, paragraph 20.1.1.9 of MIL-M-38510F.

Elantec maintains a complete Program Plan in accordance with MIL-M-38510. The plan is available for review by customers at Elantec. Included within the Program Plan is a complete equipment and facilities list.

Quality System

All quality assurance functions at Elantec report to the President and are totally independent of the manufacturing organization. These functions include Incoming Quality Control, In-Process Quality Control, Product Qualification, Quality Conformance, Document Control, Customer Specification Review, Internal Quality Audit, and Failure Analysis.

Elantec's operation is controlled by a thorough documentation system. Peripheral support systems such as document control, calibration, customer specification review, the ESD program, and archives are fully documented as to procedure and responsibility. All manufacturing operations have specifications describing the equipment operation and procedures. Product manufacturing flow charts define precise operational sequences to insure each lot is built in conformance to Elantec and Military requirements. All raw materials are purchased to Elantec Source Control Drawings. Military package materials and finishes are in accordance with MIL-M-38510.

Raw materials are inspected to rigorous requirements by Incoming Quality Control prior to release for manufacture. Minimum inspections for hybrid military products are those specified in MIL-STD-883 Revision C Method 5008 for Element Evaluation. Many of these tests are performed more often than required by the military standards. In addition, various other tests are performed to insure the integrity of each raw material. Similar tests are performed on raw materials destined for commercial products.

Travelers used throughout Elantec are structured to maintain traceability of raw materials and operators to each manufacturing lot. Lots are shipped with accurate lot numbers on the containers to provide backward traceability should this ever be required.

In-line Quality Control gates monitor the process to insure critical manufacturing operations are under control. These include wire bond pull, die shear, die and preseal visual inspection, mark permanency, and electrical test.

Before release of any Elantec commercial product, an exhaustive product qualification is performed. This includes life testing on multiple lots and various mechanical package tests. Military products subsequently receive complete Group A, B, C, and D testing per MIL-STD-883 prior to shipment of the first part. On-going Quality Conformance testing is done on military parts in compliance with Method 5008 or Method 5005. This on-going military Quality Conformance testing provides device history for sister commercial products. Products which do not have military versions receive periodic commercial Quality Conformance testing.

In Conclusion

It has been and continues to be Elantec's goal of providing product of the highest quality available. We believe the extra effort we have expended in the design, construction techniques, testing and quality control procedures results in a product which is observably superior in performance, consistently higher in quality, and provides greater lifetime in the actual application. We also believe such product to provide the overall lowest cost and greatest long term satisfaction to the customer.

We at Elantec are proud and confident of our product and therefore offer our unique "Two-for-One" policy in addition to our standard warranty:

IF YOU RECEIVE ANY ELANTEC DEVICE THAT DOES NOT MEET OUR CURRENT PUBLISHED ELECTRICAL SPECIFICATIONS, ELANTEC WILL REPLACE IT WITH TWO GOOD DEVICES.

Table I
QA Inspection Sampling Plan

Die Visual:	0.25% AQL			
Precap Visual:	0.25% Military, 1.5% Commercial			
Mark Permanency:	3 Parts/Day/Package			
Electrical Test (all products):				
	LTPD (%)	SAMPLE SIZE	ACCEPT NO.	EQUIV. AQL (%)
Computer Tests at Room Temp	2	116	0	0.04
Computer Tests Hot	3	76	0	0.07
Computer Tests Cold	5	45	0	0.11
A.C. Bench Tests at Room Temp	2	116	0	0.04

Note 1: Computer tests are all D.C. tests plus A.C. on those products where A.C. can be tested on the enhanced LTX automatic tester.
Note 2: Military lots are Q.A. sampled every lot at all temperatures.
Note 3: All non-military lots (E+, Prime, Commercial) are Q.A. sampled at room temperature D.C. Until adequate history is developed on these new products, each lot is sample tested at temperatures and on the bench. Non-military lots of mature products with adequate history are skip lot tested at temperatures or on the bench, e.g., they are Q.C. sampled every fourth of fifth lot. This frequency may change with time as more product history is developed.
Note 4: If a device which is in skip lot mode should suffer a lot failure, every lot is then tested until three lots in succession are passed before returning to skip lot mode.

Table II
Elantec Hybrid Metal Can Process Flow Summary

Operation	Commercial	E+	Prime[1]	/883[2]
Incoming QC				
Die Evaluation	X	X	X	X
Package Evaluation	X	X	X	X
Raw Material Evaluation	X	X	X	X
Assembly				
Wire Bond Pull QC	X	X	X	X
Die Shear QC	X	X	X	X
Internal Visual	X	X	X	X
Seal	X	X	X	X
Stabilization Bake	2 hours	2 hours	2 hours	24 hours
Temperature Cycling	5 cycles	5 cycles	5 cycles	10 cycles
Constant Accel.				
TO-3 (5KG)	X	X	X	X
TO-5 (30KG)	X	X	X	X
TO-8 (20KG)	X	X	X	30KG
Fine Leak				
TO-3 (5×10^{-7} cc/sec)	X	X	X	X
TO-5 (5×10^{-8} cc/sec)	X	X	X	X
TO-8 (5×10^{-8} cc/sec)	X	X	X	X
Gross Leak				
With Pressurization				X
No Pressurization	X	X	X	
Class Test		X	X	X
Burn-in		48 hours		160 hours
Electrical Test 25°C[3]	X	X	X	X
Q.C. 25°C[3]	X	X	X	X
Electrical Test Hot[3]			X	X
Q.C. Hot[3]	X	X	X	X
Electrical Test Cold[3]			X	X
Q.C. Cold[3]	X	X	X	X
External Visual	X	X	X	X
Group B, C, D Testing				X

Note 1: A prime part is a commercial part tested over the range of –55°C to +125°C.
Note 2: For complete details of Elantec's "/883" military program see "QRA-3, Elantec's 883B Program for Hybrid Integrated Circuits."
Note 3: Electrical tests performed are as documented on the individual device data sheet.

Table III
Elantec Monolithic Process Flow Summary

Operation	Commercial	E+	Prime[1]	-8[2]
Incoming QC				
Package Evaluation	X	X	X	X
Raw Material Evaluation	X	X	X	X
Assembly				
Wire Bond Pull QC	X	X	X	X
Die Shear QC	X	X	X	X
Internal Visual	X	X	X	X
Seal	X	X	X	X
Stabilization Bake[3]	1.5 hours	1.5 hours	1.5 hours	24 hours
Temperature Cycling[3]	5 cycles	5 cycles	5 cycles	10 cycles
Constant Accel. (30KG)[3]	X	X	X	X
Fine Leak (5×10^{-8} cc/sec)[3]	X	X	X	X
Gross Leak[3]				
With Pressurization				X
No Pressurization	X	X	X	
Class Test		X	X	X
Burn-in		48 hours		160 hours[4]
Electrical Test 25°C[5]	X	X	X	X
Q.C. 25°C[5]	X	X	X	X
Electrical Test Hot[5]			X	X
Q.C. Hot[5]	X	X	X	X
Electrical Test Cold[5]			X	X
Q.C. Cold[5]	X	X	X	X
External Visual	X	X	X	X
Group B, C, D Testing				X

Note 1: A prime part is a commercial part tested over the range of −55°C to +125°C.
Note 2: For complete details of Elantec's "-8" military program, see "QRA-2, Elantec's Military Processing-Monolithic Integrated Circuits."
Note 3: Applies to all packages except plastic packages.
Note 4: Military burn-in may be either 150°C for 80 hours or 125°C for 160 hours.
Note 5: Electrical tests performed are as documented on the individual device data sheet.

Elantec manufactures a standard family of monolithic integrated circuits for military applications. Screening and Quality Conformance testing is performed to MIL-STD-883 Class B. Specifics of this program are outlined herein. Parenthetical references utilized in this document indicate applicable Elantec internal specifications.

I. CONTROL SYSTEMS

1. Quality Organization
   - 1.1 The Quality Organization at Elantec reports to the President of the corporation. All quality functions are independent of the manufacturing organization.
   - 1.2 Functions under the Quality Organization's control include:
     - Incoming Inspection
     - In-Process Quality Control
     - Internal Audit
     - Qualification Testing
     - Quality Conformance Testing
     - Document Control
     - Customer Specification Review
     - Failure Analysis
     - Material Returns
2. ESD (QAP0016) AT ELANTEC
   - 2.1 All work surfaces are either stainless steel or conductive laminate. Every work surface is grounded for Electrostatic Discharge protection in accordance with OSHA requirements.
   - 2.2 Shelving at all inventory locations is grounded.
   - 2.3 Floors in all manufacturing and inventory areas are covered with conductive tile attached with conductive tile cement.
   - 2.4 All operators wear conductive heel straps.
   - 2.5 All product is marked with an equilateral triangle to indicate static sensitivity in accordance with MIL-M-38510.
   - 2.6 Finished product is packaged in anti-static materials which are completely shielded by aluminum-lined boxes or conductive bags.
3. Calibration (QAP0003)
   - 3.1 All manufacturing equipment is calibrated in accordance with MIL-STD-45662 as modified by Appendix A paragraph 20.1.1.9 of MIL-M-38510.
4. Inspection Systems
   - 4.1 Inspection System Requirements are in accordance with MIL-Q-9858.
5. Program Plan (QAP0039)
   - 5.1 Elantec maintains a complete Program Plan in accordance with MIL-M-38510. The plan is available for review by customers at Elantec.
   - 5.2 Included within the Program Plan is a complete equipment and facilities list.
6. Failure Analysis (QCX0010)
   - 6.1 Elantec has in-house capabilities to perform failure analysis in accordance with MIL-STD-883 Method 5003 Condition A.

II. MANUFACTURING

1. Location
   - 1.1 All electrical test, burn-in, and Quality Conformance Testing is performed at Elantec owned facilities located in the United States except moisture resistance, mechanical shock, vibration variable frequency and internal water vapor testing which are performed at DESC certified laboratories. Assembly and mechanical screening operations may be performed at Elantec's facility in Milpitas, Ca. or may be performed at contractors whose procedures are under the control of Elantec.
   - 1.2 Customers desiring all USA manufacture can obtain this service upon special order.
2. Incoming Inspection (QAP0006)
   - 2.1 All raw materials used in the manufacture of Elantec circuits are specified by procurement documents. They are inspected by the Incoming Inspection Department prior to release for manufacture.
3. Materials
   - 3.1 All package materials and finishes are in accordance with MIL-M-38510.
4. Seal
   - 4.1 Prior to package seal on metal can packages, each device is baked in a vacuum oven which is connected to the welder dry box. The seal is performed in a nitrogen purged dry box which is continuously monitored for moisture content. Periodic internal water vapor tests are performed to insure compliance to the 5000 PPM limit.
   - 4.2 Frit seal packages or solder seal packages are sealed in moisture controlled environments. Periodic internal water vapor tests are performed to insure compliance with the 5000 PPM limit.
5. Screening (QAP0052)
   - 5.1 Screening is performed in accordance with Method 5004 of MIL-STD-883. A summary of the screening operations is shown in Figure 1.

5.2 Burn-in is done for 160 hours at 125°C or 80 hours at 150°C. Post- burn-in electrical testing is done within 96 hours of removal of bias. PDA is 5%. Cool-down is performed under bias.

5.3 Electrical test limits, conditions, temperatures, and burn-in circuits are as specified in the appropriate Elantec data sheet. Elantec data sheets show their current revision letter and are fully controlled documents. The latest revision of any data sheet is available from Elantec Specification Control.

6. Marking (MPX0047)

6.1 All devices are marked with the Elantec part number, Elantec logo, 5 character date code indicating year and week of seal, and the lot within the week of seal, ESD equalateral triangle, and the country of origin.

6.2 Elantec's standard military devices which comply with the program outlined herein have part numbers which end with "-8".

III. QUALITY

1. Process Quality Control

1.1 Flowing 100% inspection by manufacturing, die visual and precap visual are Q.C. sample inspected by Quality Control prior to release to the next manufacturing operation.

2. Qualification (QAP0055)

2.1 Each Elantec device is tested to the requirements of MIL-M-38510. Elantec Quality and Reliability Assurance performs the function of Qualifying Activity per paragraph 1.2.1 of MIL-STD-883 Revision C.

3. Quality Conformance (QAP0055)

3.1 Group A testing is performed in-line, after

Device Screening (Figure 1)

Operation	883 Method	Conditions
Assembly		
Internal Visual	2010 Cond. B	
Seal		
Stabilization Bake	1008 C	
Temperature Cycling	1010 C	
Constant Acceleration	2001 E	
Fine Leak	1014 A1	
Gross Leak	1014 C1	
Class Test		
Mark		
Burn-in	1015	125°C, 160 Hours, or 150°C, 80 Hours
Electrical Test		25°C, Elantec Data Sheet (Guardbanded), 96 Hour Window, PDA=5%
Q.C. (Group A)	5005	25°C, Elantec Data Sheet
Electrical Test		Hot, Elantec Data Sheet (Guardbanded)
Q.C. (Group A)	5005	Hot, Elantec Data Sheet
Electrical Test		Cold, Elantec Data Sheet (Guardbanded)
Q.C. (Group A)	5005	Cold, Elantec Data Sheet
External Visual	2009	
Group B, C, D Hold	5005	Verify Group B, C, and D Data

each temperature screening test.

3.2 Group B testing is performed per Method 5005 on every inspection lot for each package type. See Figure 2.

3.3 Group C testing is performed per Method 5005 of MIL-STD-883 and MIL-M-38510 which requires Group C be performed at least every 26 weeks of date code by microcircuit group. Elantec splits its products into several microcircuit groups as is specified by Appendix E of MIL-M-38510 for monolithic devices. Lifetest end point electrical testing is to limits and conditions as specified in the Elantec data sheet and is done at three temperatures within 96 hours of removal of bias. Cooldown is done under bias. See Figure 3.

3.4 Group D is performed at least once every 36 weeks of date code for each package type. See Figure 4.

3.5 All military products are fully qualified by Groups A, B, C, and D Quality Conformance inspections prior to shipment.

IV. PROCESS CHANGES (QAP0002)

1. Elantec maintains a fully documented change control system. All manufacturing changes, including those specified by MIL-M-38510, must be submitted to and approved by Elantec Engineering and Quality and Reliability Assurance prior to implementation. Elantec Quality and Reliability Assurance performs the function of "Qualifying Activity" for changes of qualified product as per paragraph 3.4.2 of MIL-M-38510.

Group B Test Outline (Figure 2)

Subgroup	Test	883 Method	Sample Size	Acc. No.
1	Physical Dimensions	2016	2 Devices	0
2	Resistance to Solvents	2015	4 Devices	0
3	Solderability	2003	3 Devices, 22 Leads Min.	0
4	Internal Vis. and Mech.	2014	1 Device	0
5	Bond Strength	2011	4 Devices, 15 Wires Min.	0
7	Fine Leak Gross Leak	1014 1014	45 Devices 45 Devices	0 0

Group C Test Outline (Figure 3)

Subgroup	Test	883 Method	Sample Size	Acc. No.
1	Pre-Life Electricals		LTPD=5 (105 Devices)	2
	Steady State Life Test	1005		
	End Point Electricals			
2	Temperature Cycling	1010C	15	0
	Constant Acceleration	2001		
	Fine Leak Gross Leak	1014 1014		
	Visual	1010		
	End Point Electricals			

V. SPECIFICATION COMPLIANCE

1. Elantec monolithic military products are constructed, screened and Quality Conformance tested in strict compliance with MIL-M-38510F and MIL-STD-883 Revision C with no exceptions or deviations. All assembly, test, and environmental processing areas are in full compliance with MIL-M-38510 and MIL-STD-883. At this time wafer fabrication is not in complete compliance with Appendix A of MIL-M-38510 (Product Assurance Program). It is anticipated that during 1987, the wafer fabrication area will be in compliance with Appendix A. At that time, Elantec military monolithic products will be in full compliance with MIL-STD-883 Revision C. Please contact Elantec if more information is required.

Group D Test Outline (Figure 4)

Subgroup	Test	883 Method	Sample Size	Acc. No.
1	Physical Dimensions	2016	15	0
2	Lead Integrity	2004	15	0
	Fine Leak	1014		
	Gross Leak	1014		
3	Thermal Shock	1011	15	0
	Temperature Cycling	1010		
	Moisture Resistance	1004		
	Fine Leak	1014		
	Gross Leak	1014		
	Visual	1010		
	End Point Electricals			
4	Mechanical Shock	2002	15	0
	Vibration, Variable Freq.	2007		
	Constant Acceleration	2001		
	Fine Leak	1014		
	Gross Leak	1014		
	Visual	1011		
	End Point Electricals			
5	Salt Atmosphere	1009	15	0
	Fine Leak	1014		
	Gross Leak	1014		
	Visual	1009		
6	Internal Water Vapor Content	1018	3	0
			or	
			5	1
7	Adhesion of Lead Finish	2025	15	0
8	Lid Torque	2024	5	0

élantec
HIGH PERFORMANCE ANALOG INTEGRATED CIRCUITS

Elantec's 883B Program for Hybrid Integrated Circuits

QRA–3 Rev. A September, 1986

Elantec manufactures a standard family of hybrid circuits for military applications in accordance with MIL-M-38510F Appendix G and MIL-STD-883 Revision C Method 5008. Testing is performed to Class B. All manufacturing is done on Elantec's MIL-STD-1772 Certified Line. Specifics of this program are outlined herein. Parenthetical references utilized in this document indicate applicable Elantec internal specifications.

I. CONTROL SYSTEMS

1. Certified Line
   - 1.1 On February 6, 1985 Elantec's factory located at 1996 Tarob Ct., Milpitas, Ca. was certified by the Defense Electronics Supply Center (DESC) to the requirements of MIL-STD-1772 (Certification Requirements for Hybrid Microcircuit Facilities and Lines). All Elantec Military Hybrid Products are manufactured at this facility and under the controls of MIL-STD-1772.
2. Quality Organization
   - 2.1 The Quality Organization at Elantec reports to the President of the corporation. All quality functions are independent of the manufacturing organization.
   - 2.2 Functions under the Quality Organization's control include:
     Incoming Inspection
     In-Process Quality Control
     Internal Audit
     Qualification Testing
     Quality Conformance Testing
     Document Control
     Customer Specification Review
     Failure Analysis
     Material Returns
3. Facility (QAP0030)
   - 3.1 Method 5008 requires that hybrid assembly be performed under Class 100,000 conditions per Fed. Std. No. 209B. Elantec assembly and test are performed in a Class 1000 clean room. In addition, all assembly operations from die visual inspection through precap visual are performed under Class 100 laminar flow hoods. The area and hoods are routinely monitored per Fed. Std. No 209B. Temperature and humidity are monitored and controlled in accordance with MIL-STD-883.
   - 3.2 Gases are filtered at point of use.
   - 3.3 De-ionized water is filtered and bacteria controlled and resistivity is continuously monitored.
   - 3.4 All semiconductor work-in-process is stored in nitrogen purged desiccators.
4. ESD (QAP0016)
   - 4.1 All work surfaces are either stainless steel or conductive laminate. Every work surface is grounded for Electrostatic Discharge protection in accordance with OSHA requirements.
   - 4.2 Shelving at all inventory locations is grounded.
   - 4.3 Floors in all manufacturing and inventory areas are covered with conductive tile attached with conductive tile cement.
   - 4.4 All operators wear conductive heel straps.
   - 4.5 All product is marked with an equilateral triangle to indicate static sensitivity in accordance with MIL-M-38510.
   - 4.6 Finished product is packaged in anti-static materials which are completely shielded by aluminum-lined boxes.
5. Calibration (QAP0003)
   - 5.1 All manufacturing equipment is calibrated in accordance with MIL-STD-45662 as modified by Appendix A paragraph 20.1.1.9 of MIL-M-38510.
6. Inspection Systems
   - 6.1 Inspection System Requirements are in accordance with MIL-Q-9858.
7. Program Plan (QAP0039)
   - 7.1 Elantec maintains a complete Program Plan in accordance with MIL-M-38510. The plan is available for review by customers at Elantec.
   - 7.2 Included within the Program Plan is a complete equipment and facilities list.
8. Failure Analysis (QCX0010)
   - 8.1 Elantec has in-house capabilities to perform failure analysis in accordance with MIL-STD-883 Method 5003 Condition A.

II. MANUFACTURING

1. Location
   - 1.1 All Elantec thick film work, assembly, electrical test, and 100% environmental testing is performed at Elantec owned facilities located in the United States. Moisture resistance and internal water vapor testing are performed at DESC certified laboratories.
2. Incoming Inspection (QAP0006)
   - 2.1 All raw materials used in the manufacture of Elantec hybrids are specified by procurement documents. They are inspected by the Incoming Inspection Department prior to release for manufacture. Minimum inspections are

those specified by Method 5008 of MIL-STD-883 for Element Evaluation and Group D. Many tests are performed more often than required by 5008. In addition, various other tests are performed to insure the integrity of the raw materials.

3. Materials
   3.1 All package materials and finishes are in accordance with MIL-M-38510.
4. Seal
   4.1 Prior to package seal on metal can packages, each device is baked in a vacuum oven which is connected to the welder dry box. The seal is performed in a nitrogen purged dry box which is continuously monitored for moisture content.
5. Screening (QAP0052)
   5.1 Screening is performed in accordance with Method 5008 of MIL-STD-883. A summary of the screening operations is shown in Figure 1.
   5.2 Burn-in is done for 160 hours at 125°C. Post-burn-in electrical testing is done with 96 hours of removal of bias. PDA is 10%. Cool-down is performed under bias.
   5.3 Electrical test limits, conditions, temperatures, and burn-in circuits are as specified in the appropriate Elantec data sheet. Elantec data sheets show their current revision letter and are fully controlled documents. The latest revision of any data sheet is available from Elantec Specification Control.
6. Marking (MPX0047)
   6.1 All devices are marked with the Elantec part number, Elantec logo, 5 character date code indicating year and week of seal, and the lot within the week of seal, ESD equalateral triangle, and USA for country of origin.

III. QUALITY

1. Process Quality Control
   1.1 Die visual and precap visual are Q.C. sampled to a 0.25% AQL. (QCX0004, QCX0005)
   1.2 Wire bond pull testing, both destructive and non-destructive, are performed to limits and with the frequency specified by Method 5008 of MIL-STD-883. (QCX0001)
   1.3 Production lots are sample die shear tested during assembly in addition to the testing required by Group B. (QCX0003)
2. Qualification (QAP0038)
   2.1 Each Elantec device is tested to the requirements of MIL-M-38510. Elantec Quality and Reliability Assurance performs the function of Qualifying Activity per paragraph 1.2.1 of MIL-STD-883 Revision C.
3. Quality Conformance (QAP0038)
   3.1 Group A testing is performed in-line, after each temperature screening test. See Figure 1. (QCX0002)
   3.2 Group B testing is performed per Method 5008 on every inspection lot for each package type. See Figure 2.
   3.3 Group C testing is performed more frequently than required by Method 5008, which requires it to be done only once in the life of the product for Class B. Elantec tests in the manner of Method 5005 (for monolithic devices), which requires Group C be performed at least every 26 weeks of date code by microcircuit group. In addition, MIL-M-38510 Appendix E requires only that hybrids be considered as one microcircuit group. Elantec splits its products into several microcircuit groups as is specified by Appendix E for monolithic devices. Lifetest endpoint electrical testing is to limits and conditions as specified in the Elantec data sheet and is done at three temperatures within 96 hours of removal of bias. See Figure 3.
   3.4 Group D is performed as required by Method 5008. Testing is done at lease once per 6 month period for each package type. See Figure 4.
   3.5 All 883B products are fully qualified by Groups A, B, C, and D Quality Conformance inspections prior to shipment.

IV. PROCESS CHANGES (QAP0002)

1. Elantec maintains a fully documented change control system. All manufacturing changes, including those specified by MIL-M-38510, must be submitted to and approved by Elantec Engineering and Quality and Reliability Assurance prior to implementation. Additionally, Elantec utilizes multiple sources for semiconductor die to insure availability. Each die type from each vendor is fully qualified for form, fit and function as well as reliability. Internal documentation completely specifies each manufacturing alternative. Elantec Quality and Reliability Assurance performs the function of "Qualifying Activity" for changes of qualified product as per paragraph 3.4.2 of MIL-M-38510.

V. SPECIFICATION COMPLIANCE

1. Elantec military products are manufactured in strict compliance with MIL-M-38510F and MIL-STD-883 Revision C with no exceptions or deviations.

Device Screening (Figure 1)

Operation	883 Method	Conditions
Incoming Q.C.	5008 Element Evaluation	
Assembly		
Wire Bond Pull	5008, 2011 5008, 2023	
Die Shear Strength	2019	
Internal Visual	2017 Class B	
Seal		
Stabilization Bake	1008 C	
Temperature Cycling	1010 C	
Constant Acceleration	2001 A 2001 E	(TO-3) (TO-5, TO-8)
Fine Leak	1014 A1	(TO-3 Limit = 2×10^{-7} cc/sec) (TO-5 Limit = 5×10^{-8} cc/sec) (TO-8 Limit = 5×10^{-8} cc/sec)
Gross Leak	1014 C1	
Class Test		
Mark		
Burn-in	1015	125°C, 160 Hours
Electrical Test		25°C, Elantec Data Sheet (Guard-banded), 96 Hour Window, PDA = 10%
Q.C. (Group A)	5008	25°C, Elantec Data Sheet
Electrical Test		Hot, Elantec Data Sheet (Guardbanded)
Q.C. (Group A)	5008	Hot, Elantec Data Sheet
Electrical Test		Cold, Elantec Data Sheet (Guard-banded)
Q.C. (Group A)	5008	Cold, Elantec Data Sheet
External Visual	2009	
Group B, C, D Hold	5008	Verify Group B, C, and D Data

Group B Test Outline (Figure 2)

Subgroup	Test	883 Method	Sample Size	Acc. No.
1	Physical Dimensions	2016	2 Devices	0
3	Resistance to Solvents	2015	4 Devices	0
4	Internal Vis. and Mech.	2014	1 Device	0
5	Bond Strength	2011	2 Devices, 11 Wires Ea. Min.	0
6	Die Shear	2019	2 Devices, LTPD=10 Each of Internal Elements	0
7	Solderability	2003	1 Device, 15 Leads Min.	0
8	Fine Leak Gross Leak	1014A1 1014C1	15 Devices 15 Devices	0 0

Group C Test Outline (Figure 3)

Subgroup	Test	883 Method	Sample Size	Acc. No.
1	External Visual	2009	15	0
	Temperature Cycling	1010C		
	Constant Acceleration	2001		
	Fine Leak Gross Leak	1014A1 1014C1		
	Visual	1010		
	End Point Electricals			
2	Pre-Life Electricals		LTPD=5 (105 Devices)	2
	Steady State Life Test	1005		
	End Point Electricals			
3	Internal Water Vapor	1018	3 Devices or 5 Devices	0 1

Group D Test Outline (Figure 4)

Test	883 Method	Sample Size	Acc. No.
Thermal Shock	1011C	5	0
Stabilization Bake	1008 (1 hr.)	5	0
Lead Integrity	2004B2	1	0
Seal	1014A1 1014C1	5 5	0 0

Ordering Information

ELANTEC PROPRIETARY AND NSC ALTERNATE SOURCE

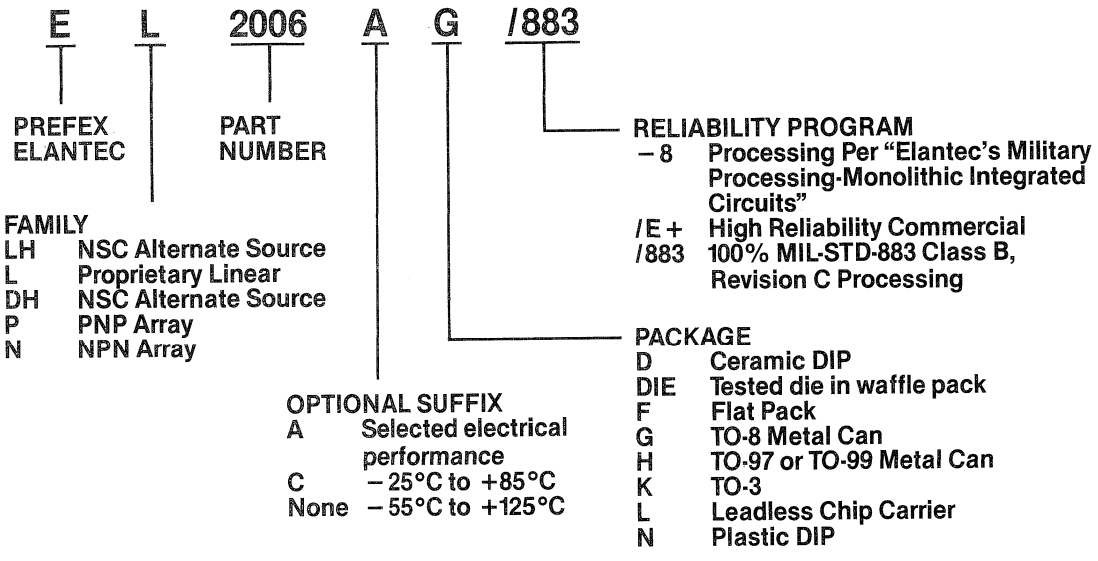

HARRIS SEMICONDUCTOR ALTERNATE SOURCE

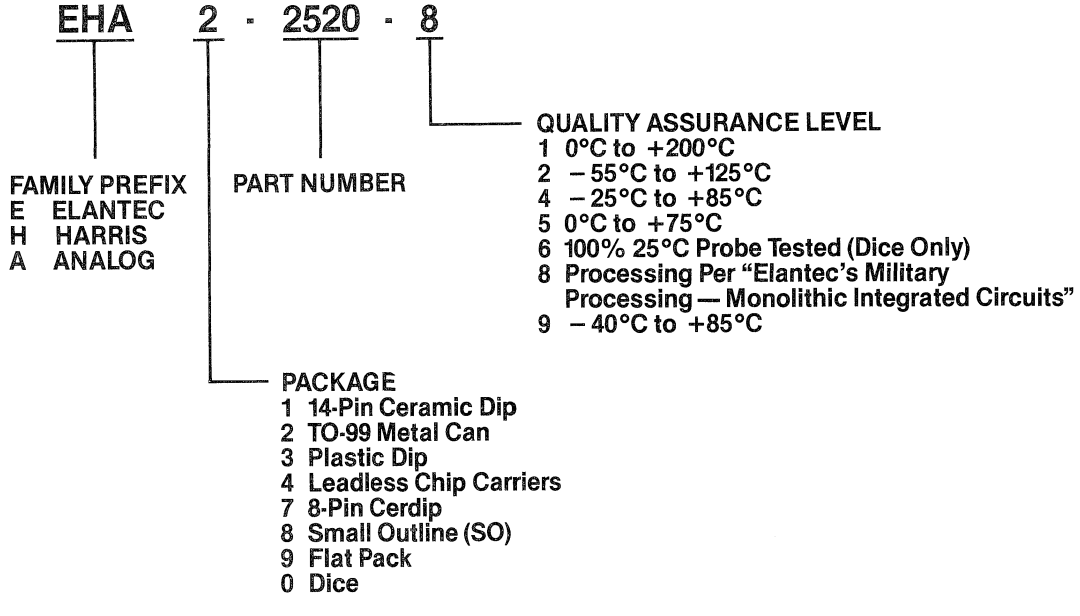

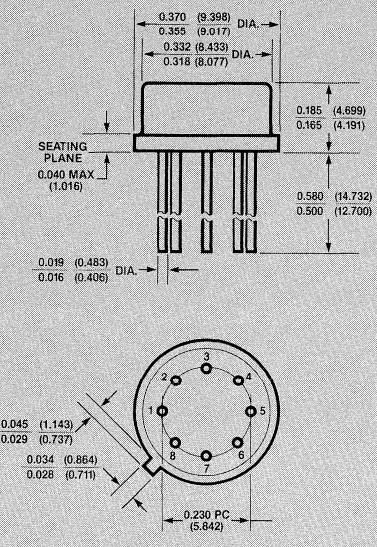

MDP0001
8-Lead TO-5 Metal Can Package

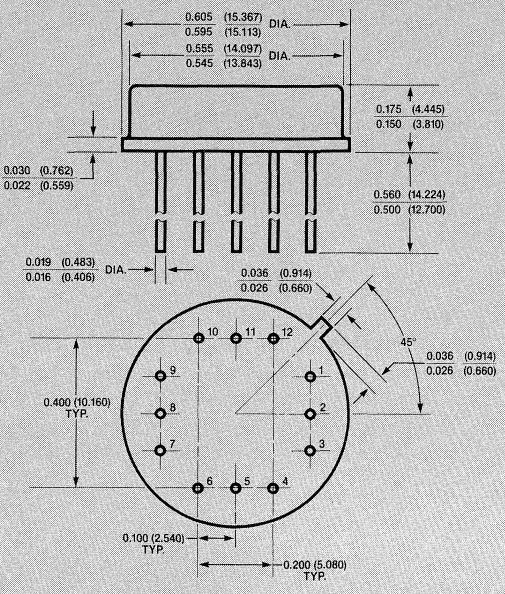

MDP0002
12-Lead TO-8 Metal Can

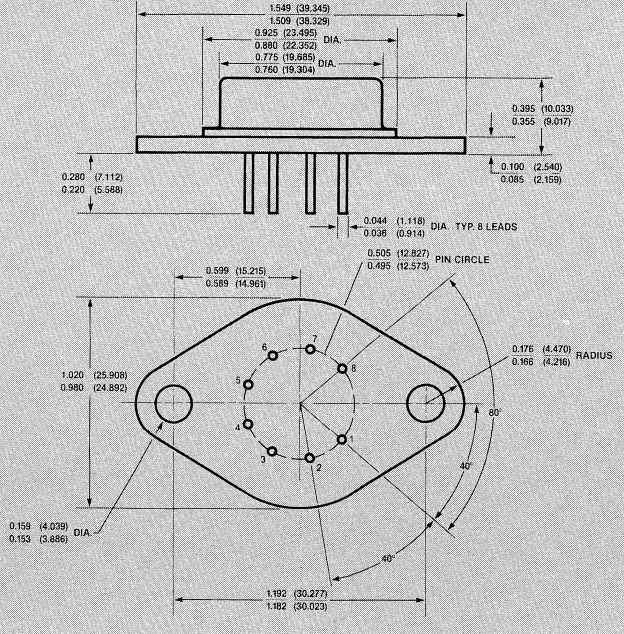

MDP0003
8-Lead TO-3 Metal Can Package (K)

Package Outlines

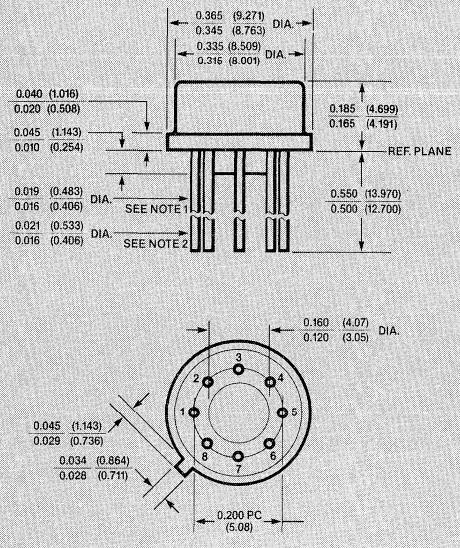

NOTES:
1. TOLERANCE APPLIES BETWEEN THE SEATING PLANE AND 0.250 FROM THE REFERENCE PLANE.
2. TOLERANCE APPLIES BETWEEN 0.250 AND 0.500 FROM THE REFERENCE PLANE.

MDP0004
8-Lead TO-99 Metal Can

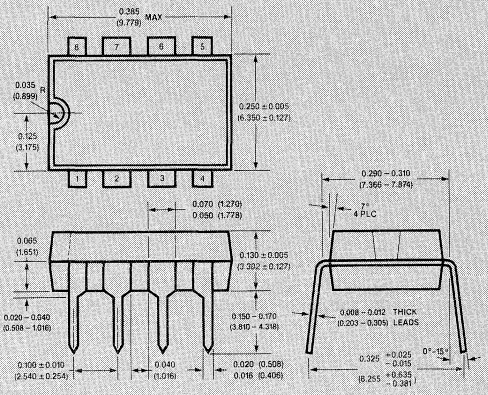

MDP0006
8-Lead Plastic DIP

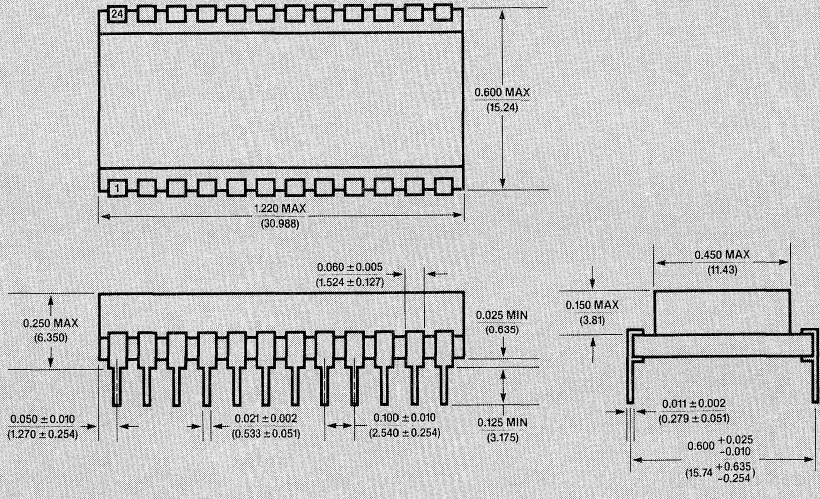

MDP0005
24-Lead Ceramic Substrate

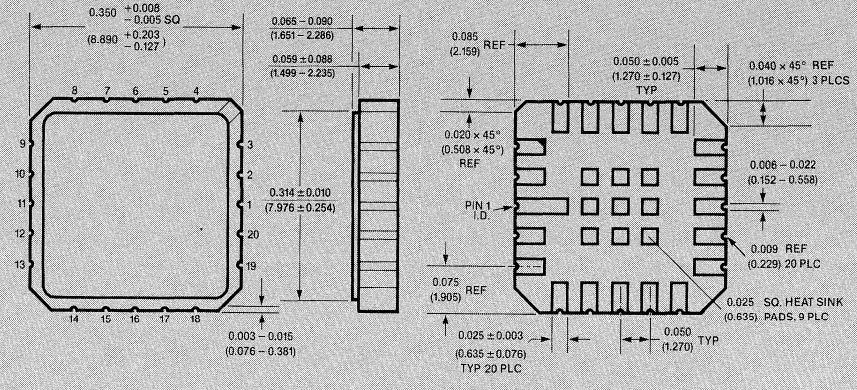

MDP0007
20-Lead Chip Carrier

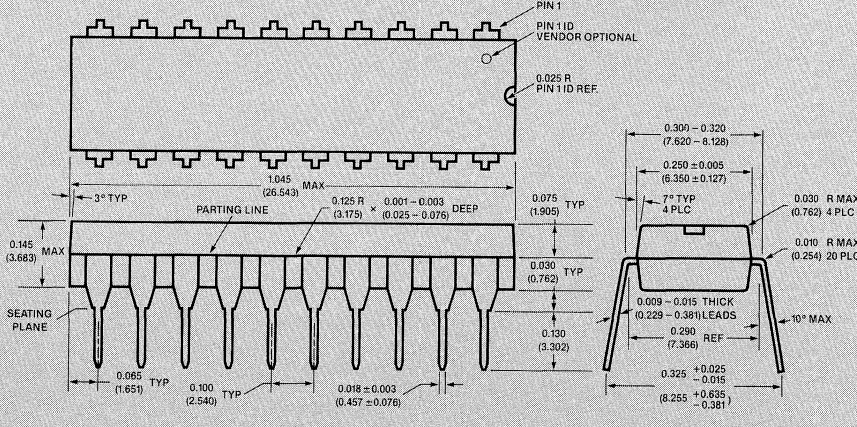

MDP0008
20-Lead Molded DIP

Package Outlines

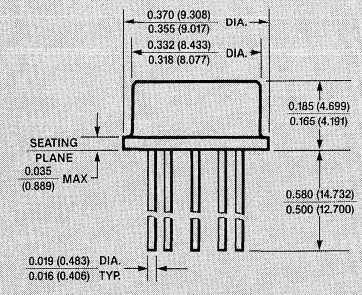

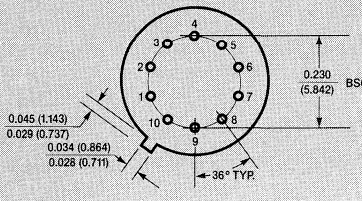

MDP0009
10-Lead TO-5 Metal Can

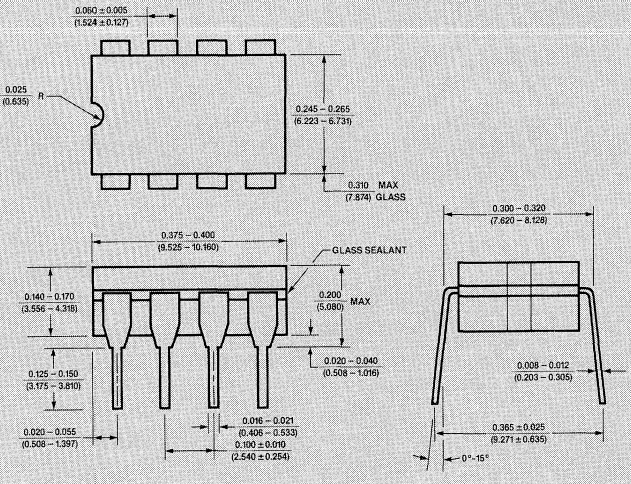

MDP0010
8-Lead CerDIP

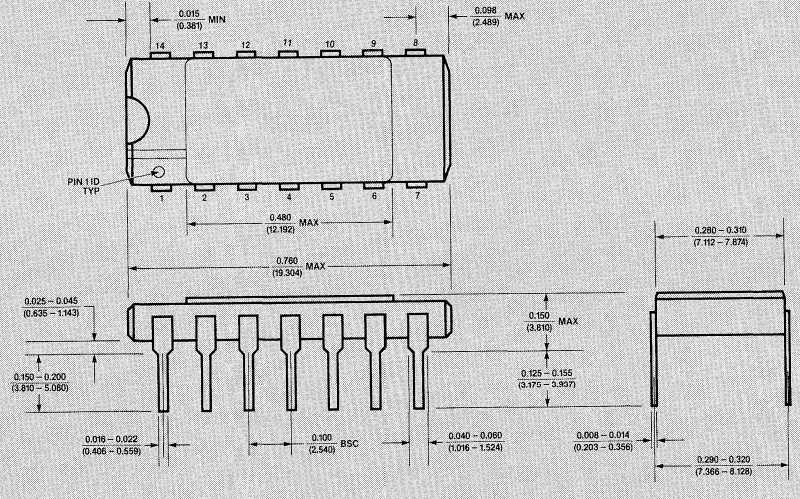

MDP0011
14-Lead Ceramic DIP (Side Braze)

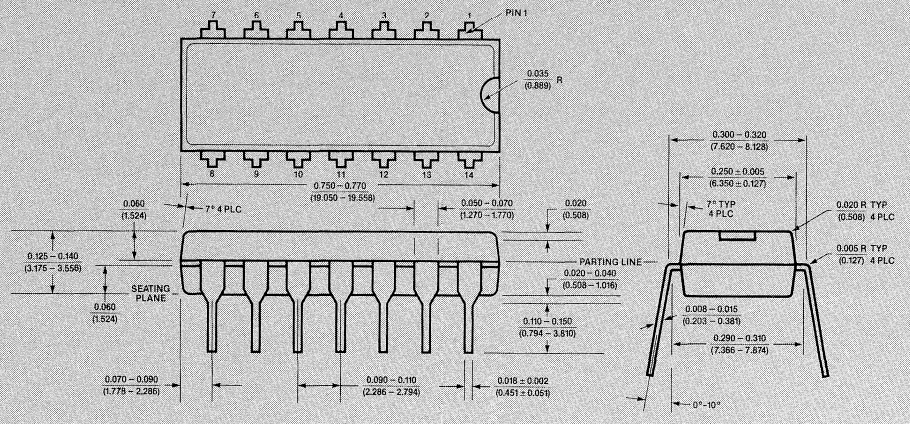

MDP0012
14-Lead Molded DIP

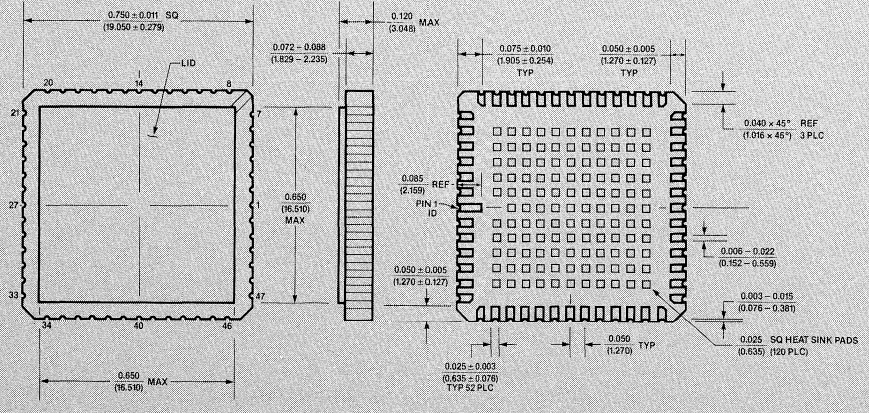

MDP0013
52-Lead Ceramic Chip Carrier

Package Outlines

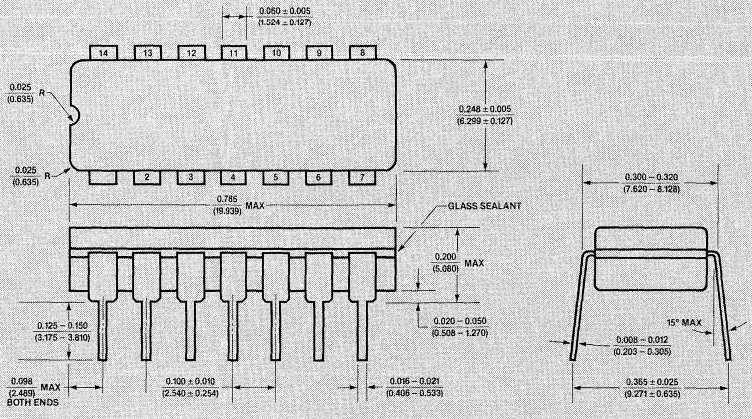

MDP0014
14-Lead CerDIP

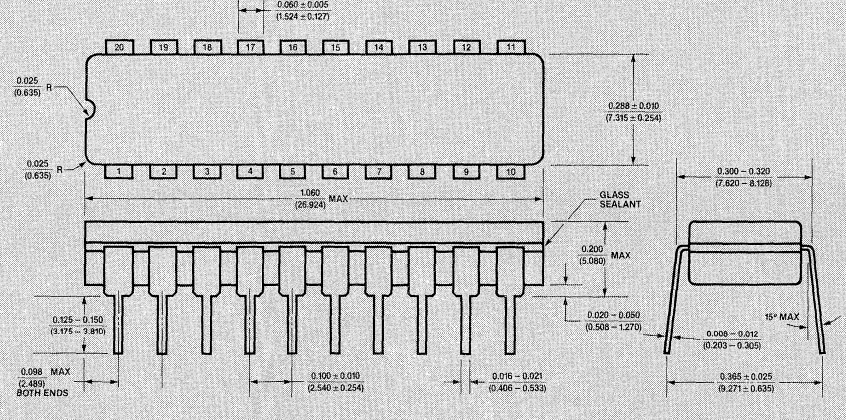

MDP0016
20-Lead CerDIP

HIGH
PERFORMANCE
ANALOG
INTEGRATED
CIRCUITS

élantec

1996 Tarob Court
Milpitas, CA 95035
Telephone: (408) 945-1323
TWX: 910–997–0649
Fax: (408) 945-9305

87 Jermyn Street
London SW1Y6JD
England
Telephone: 44-1-839-3841
Telex: 917835
Fax: 44-1-930-0751

©1987 Elantec Inc.
Printed in U.S.A. JBA25M